COMPONENT VIDEO SERIES

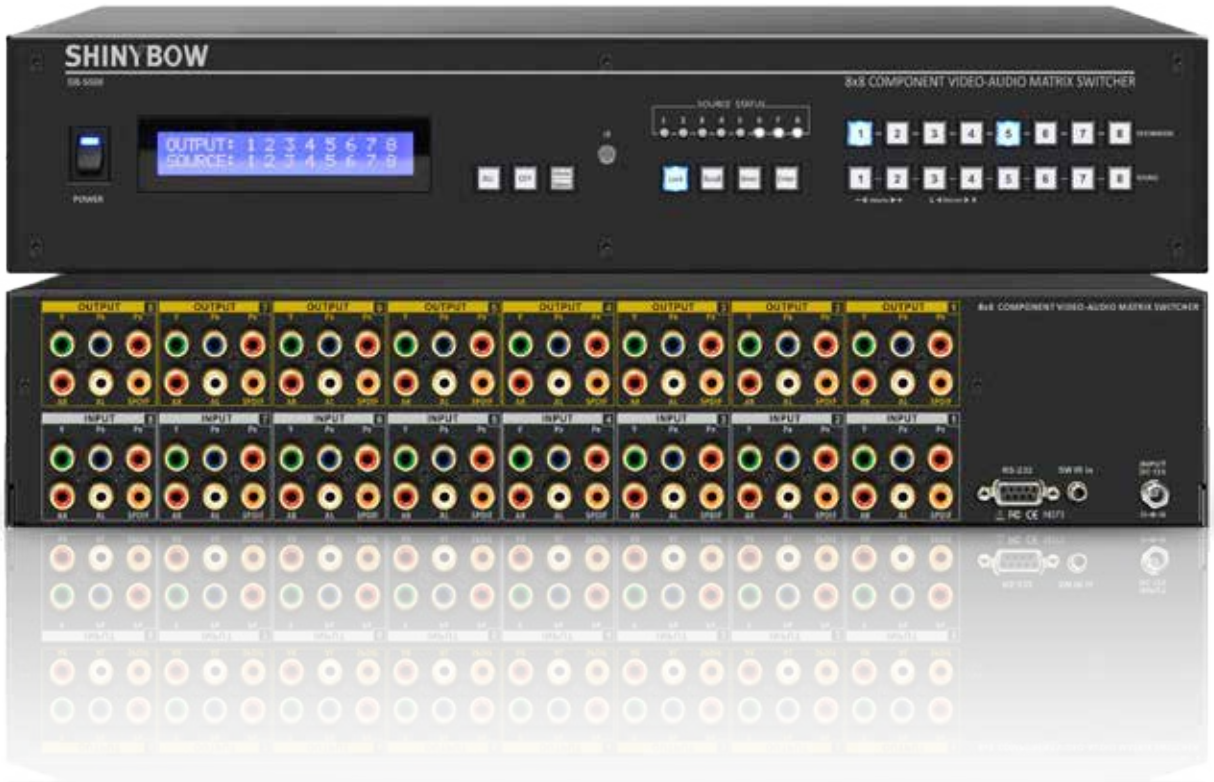

- Component Video / Audio Distribution Amplifier
- Component Video / Audio Routing Switcher
- Component Video / Audio Matrix Switcher
- Component Video / Audio Over CAT5 Extender

SB-5460

4x2 COMPONENT-AUDIO ROUTING SWITCHER

Input : 4x COMPONENT VIDEO (YPBPR), 4x Stereo Audio (AR/AL)
Output : 2x COMPONENT VIDEO (YPBPR), 2x Stereo Audio (AR/AL)

COMPOSITE AUDIO SWITCHER

SB-5460 4:2 Routing Switcher

SB-5460M 1RU Metal case

Ear Rack : 1U-300L

INTRODUCTION

SB-5460 is a high speed Video Bandwidth 250MHz, Maximum 300MHz 4 input to 2 output Router Switcher product. It's one of the most innovative Component Video(YPbPr), and Stereo Audio(AR/AL) switching products on the market today. Support 19 inch Ear mount pair part number #1U-300L. It has 4 individual inputs with 2 individual outputs. Because it is a Router Switcher, any input may be routed to output. It completely eliminates the need to constantly move around Component Video and Stereo Audio input and output cables. This Router Switcher is ideally suited for full HDTV for the resolution of 480p, 720p. Control is provided via front pushbuttons with LED readout or IR remote controller.

DIAGRAM TYPICAL

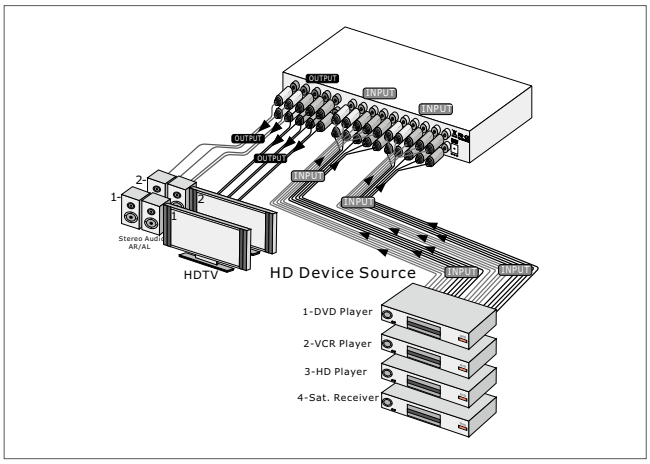

FEATURES

01. Support 4 inputs to 2 outputs Component-Audio Router Switcher
02. Support HDTV Resolution 480i, 480p, 576p, 720p
03. Video Bandwidth : 250MHz (-3dB), 200 mVp-p
04. Audio Bandwidth : 60MHz. compatible Composite Video
05. Audio Frequency Respond : 20Hz ~ 20KHz
06. Low all hostile crosstalk of -83dB @ 5MHz
07. Infrared : IR remote control via Frequency (38KHz)
08. Signals switch including: Component Video YPbPr & Stereo Audio (AR/AL)
09. Suitable for full HD high resolution Video player device and LCD/Plasma monitor displays
10. Direct selection channel via front pushbuttons with LED readout
11. Enclosure type : SB-5460M Support 19 inch Ear & 1RU Rack mountable
12. Support Lower power consumed full load under 250 mA
13. Power supply offer a universal type 100~240 VAC switch

SPECIFICATIONS

Type of switcher	4 inputs to 2 outputs Component-Audio Router Switcher
Video Bandwidth	250MHz, (-3dB) 200 mV p-p, 280MHz, (-3dB) 2V p-p, R=250MHz, G=250MHz, B=250MHz, Audio=60MHz
Audio Bandwidth	60MHz, (-3dB) (Audio-Right=60MHz, Audio-Lift=60MHz)
Audio Frequency Respond	20Hz ~20KHz
All Hostile Crosstalk	-84dB @ 5MHz, -54dB @ 50MHz
Channel Crosstalk	-56dB @ 100MHz
Slew Rate	1000 V/us, G=+1,2 V Step
Controls	IR Remote Controller(38KHz), Front panel selection buttons with LED readout
Safety Approvals	CE, FCC, VCCI
Dimension (WxDxH)	SB-5460: 9.45" x 5.71" x 1.77" (240mm x 145mm x 45mm) SB-5460M: 11.97" x 6.06" x 1.73" (304mm x 154mm x 44mm)
Weight	0.5 kg / 1.10 lb (SB-5460) 1.4 kg / 3.09 lb (SB-5460M)
Power Voltage Input	DC 12V @1A

© 2015 Copyrighted All Rights Reserved.

SB-5470

4x2 COMPONENT AUDIO MATRIX SWITCHER

Input : 4x COMPONENT VIDEO (YPBPR), 4x Stereo Audio (AR/AL)
Output : 2x COMPONENT VIDEO (YPBPR), 2x Stereo Audio (AR/AL)

COMPOSITE AUDIO MATRIX

SB-5470 4x2 Matrix Switcher

SB-5470M 1RU Metal case

Ear Rack : 1U-300L

INTRODUCTION

SB-5470 is a high speed Video Bandwidth 250MHz,Maximum 300MHz Matrix Router Switcher product. It's one of the most innovative Component Video(YPbPr), and Stereo Audio(AR/AL) switching products on the market today. Support 19 inch Ear mount pair part number #1U-300L. It has 4 individual inputs with 2 individual outputs. Because it is a matrix router, any input may be routed to any output;or the same input may be routed to all outputs or any combination.It completely eliminates the need to constantly move around Component Video and Stereo Audio input and output cables. This matrix switcher is ideally suited for full HDTV for the resolution of 480p, 720p. Control is provided via front pushbuttons with LED readout or IR remote controller.

DIAGRAM TYPICAL

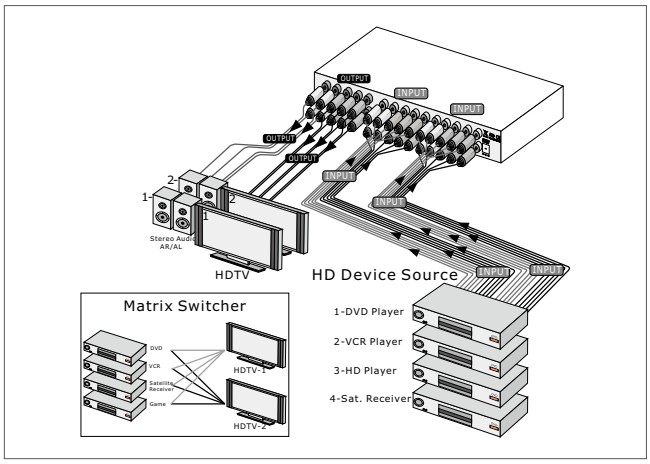

FEATURES

01. Support 4 inputs to 2 outputs Component-Audio Matrix Switcher
02. Support HDTV Resolution 480i, 480p, 576p, 720p
03. Video Bandwidth : 250MHz (-3dB), 200 mVp-p
04. Audio Bandwidth : 60MHz. compatible Composite Video
05. Audio Frequency Respond : 20Hz ~ 20KHz
06. Low all hostile crosstalk of -83dB @ 5MHz
07. Infrared : IR remote control via Frequency (38KHz)
08. Signals switch including: Component Video YPbPr, Stereo Audio (AR/AL)
09. Suitable for full HD high resolution Video player device and LCD/Plasma monitor displays
10. Direct selection and confirm via front pushbuttons with LED readout
11. Enclosure type : Support 19 inch Ear & 1RU Rack mountable panel
12. Support Lower power consumed full load under 450 mA
13. Power supply offer a universal type 100~240 VAC switch

SPECIFICATIONS

Type of switcher	4 inputs to 2 outputs Component-Audio Matrix Switcher
Video Bandwidth	250MHz, (-3dB) 200 mV p-p, 300MHz, (-3dB) 2V p-p, R=250MHz, G=250MHz, B=250MHz, Audio=60MHz
Audio Bandwidth	60MHz, (-3dB) (Audio-Right=60MHz, Audio-Lift=60MHz)
Audio Frequency Respond	20Hz ~20KHz
All Hostile Crosstalk	-84dB @ 5MHz, -54dB @ 50MHz
Channel Crosstalk	-56dB @ 100MHz
Slew Rate	1000 V/us, G=+1,2 V Step
Controls	IR Remote Controller(38KHz), Front panel selection buttons with LED readout
Safety Approvals	CE, FCC, VCCI, Erp, WEEE
Dimension (WxDxH)	SB-5470: 9.45" x 5.71" x 1.77" (240mm x 145mm x 45mm) SB-5470M: 11.97" x 6.06" x 1.73" (304mm x 154mm x 44mm)
Weight	0.5 kg / 1.10 lb (SB-5470) 1.4 kg / 3.08 lb (SB-5470M)
Power Voltage Input	DC 12V @ 1A

© 2015 Copyrighted All Rights Reserved.

SB-5526

4x2 COMPONENT-DIGITAL-OPTICAL-AUDIO MATRIX SWITCHER

Input : 4x COMPONENT(YPBPR), DIGITAL AUDIO (PCM), OPTICAL(Toslink), Stereo Audio (AR/AL)
Output : 2x COMPONENT(YPBPR), DIGITAL AUDIO (PCM), OPTICAL(Toslink), Stereo Audio (AR/AL)

MATRIX PRO

Ear Rack : 1U-440L

INTRODUCTION

SB-5526 is a high speed Video Bandwidth 325MHz Maximum 380MHz Matrix Router Switcher product. It's one of the most innovative Component Video (YPbPr) Digital Audio(PCM), Optical(Toslink) and Stereo Audio(AR/AL) Switching products on the market today. Support 19 inch Ear mount pair part number #1U-440L. It has 4 individual inputs with 2 individual outputs. Because it is a matrix router, any input may be routed to any output; or the same input may be routed to all outputs or any combination. It completely eliminates the need to constantly move around Component Video, Digital Audio and Stereo Audio input and output cables. This matrix switcher is ideally suited for full HDTV for the resolution of 480p, 720p. Control is provided via front pushbuttons with LED readout or IR remote controller. A RS-232 interface is provided for interfacing with third party control. A Windows-based control software package is included to provide complete control of the SB-5526 from a PC.

DIAGRAM TYPICAL

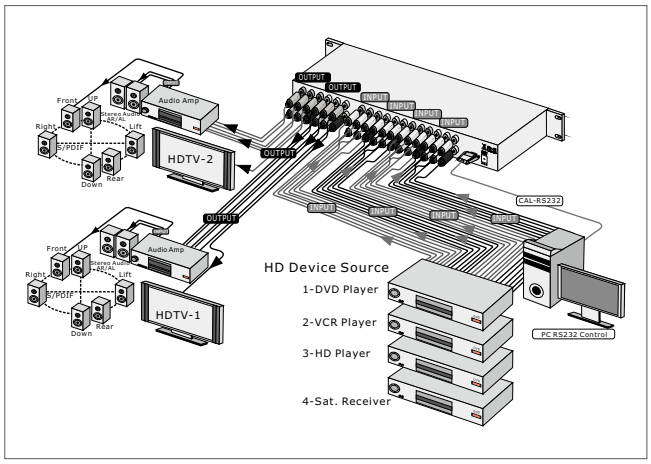

FEATURES

01. Support 4 inputs to 2 outputs Component-Digital-Optical-Audio Matrix Switcher
02. Support HDTV Resolution 480i, 480p, 576p, 720p
03. Video Bandwidth : 325MHz (-3dB), 200 mVp-p
04. Excellent Video(Component), Digital Audio, Optical and Audio Performance
05. Audio Frequency Respond : 20Hz ~ 20KHz
06. Low all hostile crosstalk of -83dB @ 5MHz
07. Excellent ESD rating : exceeds 4000 V
08. Switching Component Video YPbPr, Digital Audio(PCM) and Audio signals
09. Suitable for full HD high resolution Video player device and LCD/Plasma monitor displays
10. Direct selection and confirm via front pushbuttons with LED readout
11. Infrared : IR remote control (38KHz)
12. Support RS 232 interface control driver for 95/98/2000/xp A Windows-based control software Driver packaged
13. RS 232 protocol list with manual attached
14. Enclosure type : Support 19 inch Ear & 1RU Rack mountable pane
15. Support Lower power consumed full load under 1500 mA
16. Power supply offer a universal type 100~240 VAC switch

SPECIFICATIONS

Type of Switcher	4 x 2 Component Video/Optical/Digital Audio and Stereo Audio Matrix Switcher
Type of Signal	Component Video/Optical/Digital Audio and Stereo Audio connectors
Complete Solution	Fully Buffered inputs and outputs
Channel switching	15ns
Scan rates accepted	50Hz or 60Hz
Video Performance	90MHz 0.1dB Gain Flatness, 0.01% Differential Gain Error
Differential Phase Error	0.02, 0.1dB (RL=150)
Video Bandwidth	380MHz, (-3dB) 200mVp-p, 310MHz (-3dB) 2Vp-p
High resolution	Refresh for HDTV 408p, 576p, 720p, 1080i60, 1080p60
Digital Bandwidth	110MHz
Audio Frequency Respond	20Hz~20KHz, +0.05dB
Slew rate	1000 V/us
OFF isolation	-100dB @ 10MHz
All Hostile Crosstalk	-84dB @ 5MHz, -54dB @ 50MHz
Digital	Coaxial (S/PDIF) Digital Audio (PCM) 10Mbps
Optical (S/PDIF) in/out	Toslink (PS:OC3=STM1=155.52 Mbps)
Controls	IR remote controller, front pressed buttons with LED readout, RS-232
Safety approvals	CE, FCC, VCCI
Dimension (WxDxH)	17.41" x 7.87" x 1.74" (442mm x 200mm x 44mm)
Weight	2.45 kg / 5.4 lb
Power Supply	DC12V/2A

© 2015 Copyrighted All Rights Reserved.

SB-5644LCM

4x4 COMPONENT-DIGITAL-AUDIO MATRIX SWITCHER

Input : 4x COMPONENT(YPBPR), DIGITAL AUDIO (PCM), Stereo Audio (AR/AL)
Output : 4x COMPONENT(YPBPR), DIGITAL AUDIO (PCM), Stereo Audio (AR/AL)

COMPONENT MATRIX PRO

Ear Rack : 1U-440L

INTRODUCTION

SB-5644 is a high speed Video Bandwidth 325MHz Maximum 380MHz Matrix Router Switcher product. It's one of the most innovative Component Video (YPbPr), Digital Audio(PCM) and Stereo Audio (AR/AL) Switching products on the market today. Support 19 inch Ear mount pair part number #1U-440L. It has 4 individual inputs with 4 individual outputs. Because it is a matrix router, any input may be routed to any output; or the same input may be routed to all outputs or any combination. It completely eliminates the need to constantly move around Component Video, Digital Audio and Stereo Audio input and output cables. This matrix switcher is ideally suited for full HDTV for the resolution of 480p, 720p. Control is provided via front pushbuttons with LED readout or IR remote controller. A RS-232 interface is provided for interfacing with third party control. A Windows-based control software package is included to provide complete control of the SB-5644 from a PC.

DIAGRAM TYPICAL

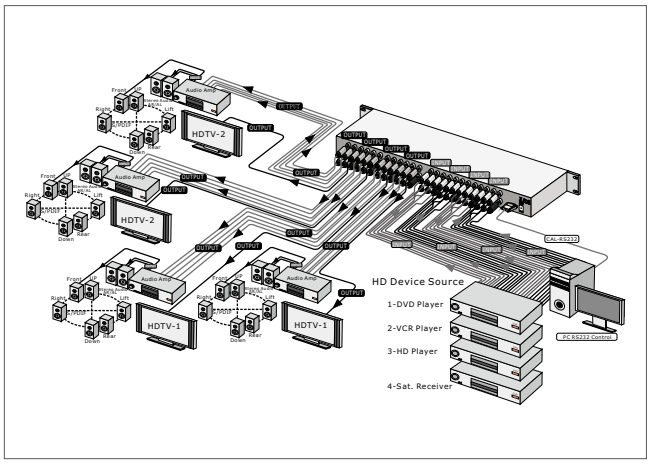

FEATURES

01. Support 4 inputs to 4 outputs Component-Digital-Audio Matrix Switcher
02. Support HDTV Resolution 480i, 480p, 576p, 720p
03. Video Bandwidth : 325MHz (-3dB), 200 mVp-p
04. Excellent Video(Component), Digital Audio and Stereo Audio Performance
05. Audio Frequency Respond : 20Hz ~ 20KHz
06. Low all hostile crosstalk of -83dB @ 5MHz
07. Excellent ESD rating : exceeds 4000 V
08. Switching Component Video YPbPr, Digital Audio(PCM) and Audio signals
09. Suitable for full HD high resolution Video player device and LCD/Plasma monitor displays
10. Direct selection and confirm via Front pushbuttons with LED readout
11. Infrared : IR remote control (38KHz)
12. Support RS 232 interface control driver for 95/98/2000/xp A Windows-based control software Driver packaged
13. RS 232 protocol list with manual attached
14. Enclosure type : Support 19 inch Ear & 1RU Rack mountable pane
15. Support Lower power consumed full load under 1500 mA
16. Power supply offer a universal type 100~240 VAC switch

SPECIFICATIONS

Type of switcher	4 inputs to 4 outputs Component-Digital-Audio Matrix Switcher
Video Bandwidth	325MHz, (-3dB) 200 mV p-p, 380MHz, (-3dB) 2V p-p, R=325MHz, G=325MHz, B=325MHz, Digital=110MHz, Audio=60MHz
Audio Bandwidth	60MHz, (-3dB) (Audio-Right=60MHz, Audio-Lift=60MHz)
Audio Frequency Respond	20Hz ~20KHz
Gain Flatness	90MHz, 0.1dB
Differential Gain Error	0.01%, 0.1dB
Differential Phase Error	0.02, 0.1dB (RL=150W)
Fast settling time	15ns To 0.1%
All Hostile Crosstalk	-84dB @ 5MHz, -54dB @ 50MHz
Channel Crosstalk	-56dB @ 100MHz
Slew Rate	1000 V/us, G=+1,2 V Step
High OFF Isolation	-100dB @ 10MHz
Output Current	100 mA
Low power CMOS	550 uA Quiescent Current
Controls	IR Remote Controller (38KHz), Front panel selection buttons with LED readout and RS-232 PC control
Safety Approvals	CE, FCC, VCCI
Dimension (WxDxH)	17.32" x 7.80" x 1.73" (440mm x 200mm x 44mm)
Weight	2.45 kg / 5.4 lb
Power Voltage Input	DC 12V @ 2A

© 2015 Copyrighted All Rights Reserved.

SB-5564

6x4 COMPONENT · AUDIO MATRIX SWITCHER

Input : 6x COMPONENT(YPBPR), Stereo Audio (AR/AL)
Output : 4x COMPONENT(YPBPR), Stereo Audio (AR/AL)

COMPONENT | AUDIO | MATRIX | PRO

Ear Rack : 1U-440L

INTRODUCTION

SB-5564 is a high speed Video Bandwidth 325MHz Maximum 380MHz Matrix Router Switcher product. It's one of the most innovative Component Video(YPbPr)and Stereo Audio(AR/AL) Switching products on the market today. Support 19 inch Ear mount pair part number #1U-440L. It has 6 individual inputs with 4 individual outputs. Because it is a matrix router, any input maybe routed to any output; or the same input may be routed to all outputs or any combination. It completely eliminates the need to constantly move around Component Video, Digital Audio and Stereo Audio input and output cables. This matrix switcher is ideally suited for full High Definition LCD HDTV TV for resolution 480p, 720p. Control is provided via front pushbuttons with LED readout or IR remote controller. A RS-232 interface is provided for interfacing with third party control. A Windows-based control software package is included to provide complete control of the SB-5564 from a PC.

DIAGRAM TYPICAL

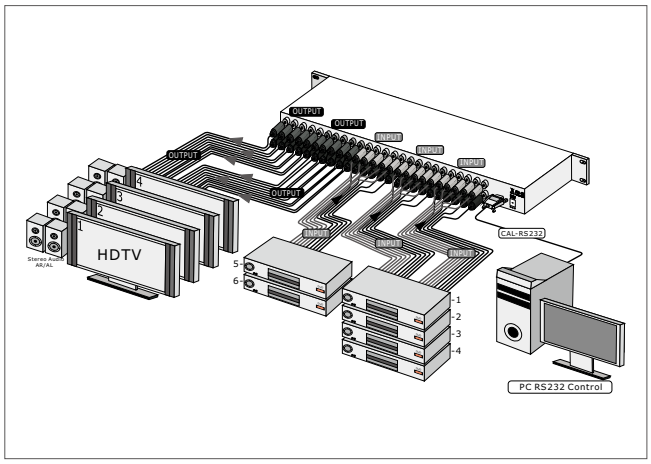

FEATURES

01. Support 6 inputs to 4 outputs Component Video Audio Matrix Switcher
02. Support HDTV Resolution 480i, 480p, 576p, 720p
03. Video Bandwidth : 325MHz (-3dB), 200 mVp-p
04. Excellent Video(Component), Digital Audio and Stereo Audio Performance
05. Audio Frequency Respond : 20Hz ~ 20KHz
06. Low all hostile crosstalk of -83dB @ 5MHz
07. Excellent ESD rating : exceeds 4000 V
08. Switching Component Video YPbPr and Stereo Audio signals
09. Suitable for full HD high resolution Video player device and LCD/Plasma monitor displays
10. Direct selection and confirm via Front pushbuttons with LED readout
11. Infrared : IR remote control (38KHz)
12. Support RS 232 interface control driver for 95/98/2000/xp A Windows-based control software Driver packaged
13. RS 232 protocol list with manual attached
14. Enclosure type : Support 19 inch Ear & 1RU Rack mountable pane
15. Support Lower power consumed full load under 1350 mA
16. Power supply offer a universal type 100~240 VAC switch

SPECIFICATIONS

Type of switcher	6 inputs to 4 outputs Component Video Audio Matrix Switcher
Video Bandwidth	325MHz, (-3dB) 200 mV p-p, 380MHz, (-3dB) 2V p-p, R=325MHz, G=325MHz, B=325MHz, Digital=110MHz, Audio=60MHz
Audio Bandwidth	60MHz, (-3dB) (Audio-Right=60MHz, Audio-Lift=60MHz)
Audio Frequency Respond	20Hz ~20KHz
Gain Flatness	90MHz, 0.1dB
Differential Gain Error	0.01%, 0.1dB
Differential Phase Error	0.02, 0.1dB (RL=150W)
Fast settling time	15ns To 0.1%
All Hostile Crosstalk	-84dB @ 5MHz, -54dB @ 50MHz
Channel Crosstalk	-56dB @ 100MHz
Slew Rate	1000 V/us, G=+1,2 V Step
High OFF Isolation	-100dB @ 10MHz
Output Current	100 mA
Low power CMOS	550 uA Quiescent Current
Controls	IR Remote Controller(38KHz), Front panel selection buttons with LED readout and RS-232 PC control
Safety Approvals	CE, FCC, VCCI
Dimension (WxDxH)	17.32" x 7.80" x 1.73" (440mm x 200mm x 44mm)
Weight	2.45 kg / 5.4 lb
Power Voltage Input	DC 12V @ 2A

© 2015 Copyrighted All Rights Reserved.

SB-5564LCM

6x4 COMPONENT · AUDIO MATRIX SWITCHER

Input : 6x COMPONENT(YPBPR), Stereo Audio (AR/AL)
Output : 4x COMPONENT(YPBPR), Stereo Audio (AR/AL)

COMPONENT AUDIO MATRIX PRO

Ear Rack : 1U-440L

INTRODUCTION

SB-5564 is a high speed Video Bandwidth 325MHz Maximum 380MHz Matrix Router Switcher product. It's one of the most innovative Component Video(YPbPr)and Stereo Audio(AR/AL) Switching products on the market today. Support 19 inch Ear mount pair part number #1U-440L and MRM is 19 inch 1RU Rack mount type. It has 6 individual inputs with 4 individual outputs. Because it is a matrix router, any input maybe routed to any output; or the same input may be routed to all outputs or any combination. It completely eliminates the need to constantly move around Component Video, Digital Audio and Stereo Audio input and output cables. This matrix switcher is ideally suited for full High Definition LCD HDTV TV for resolution 480p, 720p 1080i and 1080p or Plasma display monitor applications. Control is provided via front pushbuttons with LED readout or IR remote controller. A RS-232 interface is provided for interfacing with third party control. A Windows-based control software package is included to provide complete control of the SB-5564 from a PC.

DIAGRAM TYPICAL

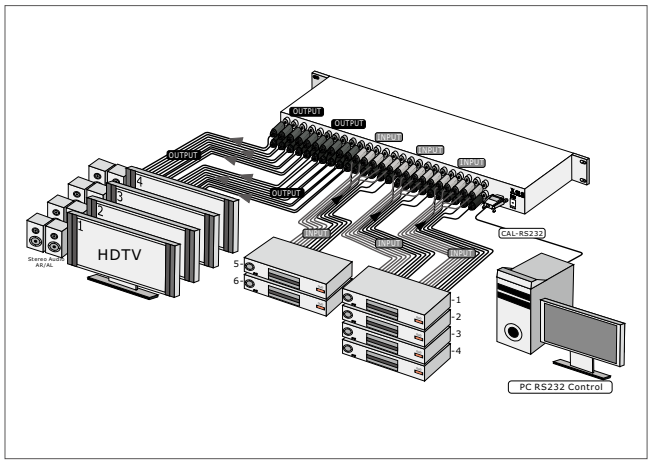

FEATURES

01. Support 6 inputs to 4 outputs Component Video Audio Matrix Switcher
02. Support HDTV Resolution 480i, 480p, 576p, 720p, 1080i and 1080p
03. Video Bandwidth : 325MHz (-3dB), 200 mVp-p
04. Excellent Video(Component), Digital Audio and Stereo Audio Performance
05. Audio Frequency Respond : 20Hz ~ 20KHz
06. Low all hostile crosstalk of -83dB @ 5MHz
07. Excellent ESD rating : exceeds 4000 V
08. Switching Component Video YPbPr and Stereo Audio signals
09. Suitable for full HD high resolution Video player device and LCD/Plasma monitor displays
10. Direct selection and confirm via Front pushbuttons with LED readout
11. Infrared : IR remote control (38KHz)
12. Support RS 232 interface control driver for 95/98/2000/xp A Windows-based control software Driver packaged
13. RS 232 protocol list with manual attached
14. Enclosure type : Support 19 inch Ear & 1RU Rack mountable pane
15. Support Lower power consumed full load under 1350 mA
16. Power supply offer a universal type 100~240 VAC switch

SPECIFICATIONS

Type of switcher	6 inputs to 4 outputs Component Video Audio Matrix Switcher
Video Bandwidth	325MHz, (-3dB) 200 mV p-p, 380MHz, (-3dB) 2V p-p, R=325MHz, G=325MHz, B=325MHz, Digital=110MHz, Audio=60MHz
Audio Bandwidth	60MHz, (-3dB) (Audio-Right=60MHz, Audio-Lift=60MHz)
Audio Frequency Respond	20Hz ~20KHz
Gain Flatness	90MHz, 0.1dB
Differential Gain Error	0.01%, 0.1dB
Differential Phase Error	0.02, 0.1dB (RL=150W)
Fast settling time	15ns To 0.1%
All Hostile Crosstalk	-84dB @ 5MHz, -54dB @ 50MHz
Channel Crosstalk	-56dB @ 100MHz
Slew Rate	1000 V/us, G=+1,2 V Step
High OFF Isolation	-100dB @ 10MHz
Output Current	100 mA
Low power CMOS	550 uA Quiescent Current
Controls	IR Remote Controller (38KHz), Front panel selection buttons with LED readout and RS-232 PC control
Safety Approvals	CE, FCC, VCCI
Dimension (WxDxH)	17.32" x 7.80" x 1.73" (440mm x 200mm x 44mm)
Weight	2.45 kg / 5.4 lb
Power Voltage Input	DC 12V @ 2A

© 2015 Copyrighted All Rights Reserved.

SB-5582

8x2 COMPONENT · AUDIO MATRIX SWITCHER

Input : 8x COMPONENT(YPBPR), Stereo Audio (AR/AL)
Output : 2x COMPONENT(YPBPR), Stereo Audio (AR/AL)

COMPONENT | AUDIO | MATRIX | PRO

Ear Rack : 1U-440L

INTRODUCTION

SB-5582 is a high speed Video Bandwidth 325MHz Maximum 380MHz Matrix Router Switcher product. It's one of the most innovative Component Video(YPbPr) and Stereo Audio(AR/AL) Switching products on the market today. Support 19 inch Ear mount pair part number #1U-440L. It has 8 individual inputs with 2 individual outputs. Because it is a matrix router, any input may be routed to any output; or the same input may be routed to all outputs or any combination. It completely eliminates the need to constantly move around Component Video, Digital Audio and Stereo Audio input and output cables. This matrix switcher is ideally suited for full HDTV for the resolution of 480p, 720p. Control is provided via front pushbuttons with LED readout or IR remote controller. A RS-232 interface is provided for interfacing with third party control A Windows-based control software package is included to provide complete control of the SB-5582 from a PC.

DIAGRAM TYPICAL

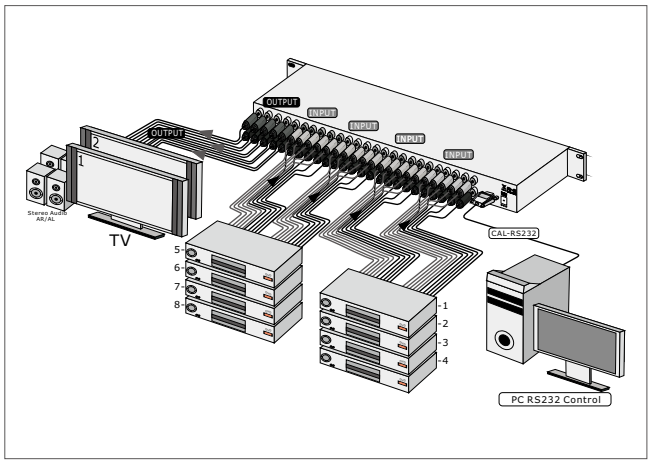

FEATURES

01. Support 8 inputs to 2 outputs Component Video Audio Matrix Switcher
02. Support HDTV Resolution 480i, 480p, 576p, 720p
03. Video Bandwidth : 325MHz (-3dB), 200 mVp-p
04. Excellent Video(Component), Digital Audio and Stereo Audio Performance
05. Audio Frequency Respond : 20Hz ~ 20KHz
06. Low all hostile crosstalk of -83dB @ 5MHz
07. Excellent ESD rating : exceeds 4000 V
08. Switching Component Video YPbPr and Stereo Audio signals
09. Suitable for full HD high resolution Video player device and LCD/Plasma monitor displays
10. Direct selection and confirm via front pushbuttons with LED readout
11. Infrared : IR remote control (38KHz)
12. Support RS 232 interface control driver for 95/98/2000/xp A Windows-based control software driver packaged
13. RS 232 protocol list with manual attached
14. Enclosure type : Support 19 inch Ear & 1RU Rack mountable pane
15. Support Lower power consumed full load under 800 mA
16. Power supply offer a universal type 100~240 VAC switch

SPECIFICATIONS

Type of switcher	8 inputs to 2 outputs Component Video Audio Matrix Switcher
Video Bandwidth	325MHz, (-3dB) 200 mV p-p, 380MHz, (-3dB) 2V p-p, R=325MHz, G=325MHz, B=325MHz, Digital=110MHz, Audio=60MHz
Audio Bandwidth	60MHz, (-3dB) (Audio-Right=60MHz, Audio-Lift=60MHz)
Audio Frequency Respond	20Hz ~20KHz
Gain Flatness	90MHz, 0.1dB
Differential Gain Error	0.01%, 0.1dB
Differential Phase Error	0.02, 0.1dB (RL=150W)
Fast settling time	15ns To 0.1%
All Hostile Crosstalk	-84dB @ 5MHz, -54dB @ 50MHz
Channel Crosstalk	-56dB @ 100MHz
Slew Rate	1000 V/us, G=+1,2 V Step
High OFF Isolation	-100dB@10MHz
Output Current	100 mA
Low power CMOS	550 uA Quiescent Current
Controls	IR Remote Controller(38KHz), Front panel selection buttons with LED readout and RS-232 PC control
Safety Approvals	CE, FCC, VCCI
Dimension (WxDxH)	17.32" x 7.80" x 1.73" (440mm x 200mm x 44mm)
Weight	2.45 kg / 5.4 lb
Power Voltage Input	DC 12V @ 2A

© 2015 Copyrighted All Rights Reserved.

SB-5582LCM

8x2 COMPONENT · AUDIO MATRIX SWITCHER

Input : 8x COMPONENT(YPBPR), Stereo Audio (AR/AL)
Output : 2x COMPONENT(YPBPR), Stereo Audio (AR/AL)

COMPONENT AUDIO MATRIX PRO

Ear Rack : 1U-440L

INTRODUCTION

SB-5582 is a high speed Video Bandwidth 325MHz Maximum 380MHz Matrix Router Switcher product. It's one of the most innovative Component Video(YPbPr) and Stereo Audio(AR/AL) Switching products on the market today. Support 19 inch Ear mount pair part number #1U-440L. It has 8 individual inputs with 2 individual outputs. Because it is a matrix router, any input may be routed to any output; or the same input may be routed to all outputs or any combination. It completely eliminates the need to constantly move around Component Video, Digital Audio and Stereo Audio input and output cables. This matrix switcher is ideally suited for full HDTV for the resolution of 480p, 720p, 1080i. Control is provided via front pushbuttons with LED readout or IR remote controller. A RS-232 interface is provided for interfacing with third party control A Windows-based control software package is included to provide complete control of the SB-5582 from a PC.

DIAGRAM TYPICAL

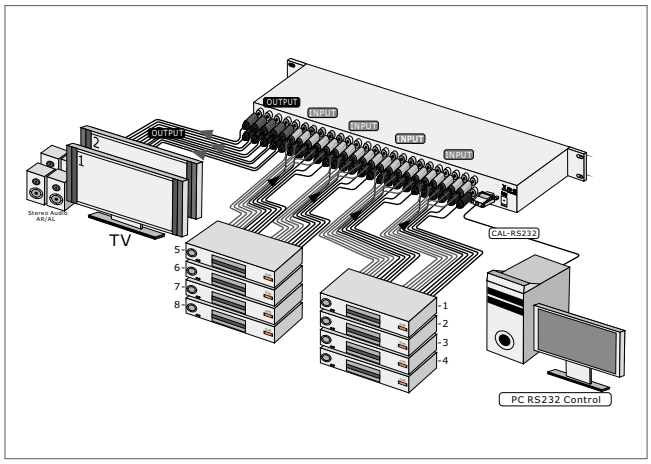

FEATURES

01. Support 8 inputs to 2 outputs Component Video Audio Matrix Switcher
02. Support HDTV Resolution 480i, 480p, 576p, 720p
03. Video Bandwidth : 325MHz (-3dB), 200 mVp-p
04. Excellent Video(Component), Digital Audio and Stereo Audio Performance
05. Audio Frequency Respond : 20Hz ~ 20KHz
06. Low all hostile crosstalk of -83dB @ 5MHz
07. Excellent ESD rating : exceeds 4000 V
08. Switching Component Video YPbPr and Stereo Audio signals
09. Suitable for full HD high resolution Video player device and LCD/Plasma monitor displays
10. Direct selection and confirm via front pushbuttons with LED readout
11. Infrared : IR remote control (38KHz)
12. Support RS 232 interface control driver for 95/98/2000/xp A Windows-based control software driver packaged
13. RS 232 protocol list with manual attached
14. Enclosure type : Support 19 inch Ear & 1RU Rack mountable pane
15. Support Lower power consumed full load under 800 mA
16. Power supply offer a universal type 100~240 VAC switch

SPECIFICATIONS

Type of switcher	8 inputs to 2 outputs Component Video Audio Matrix Switcher
Video Bandwidth	325MHz, (-3dB) 200 mV p-p, 380MHz, (-3dB) 2V p-p, R=325MHz, G=325MHz, B=325MHz, Digital=110MHz, Audio=60MHz
Audio Bandwidth	60MHz, (-3dB) (Audio-Right=60MHz, Audio-Lift=60MHz)
Audio Frequency Respond	20Hz ~20KHz
Gain Flatness	90MHz, 0.1dB
Differential Gain Error	0.01%, 0.1dB
Differential Phase Error	0.02, 0.1dB (RL=150W)
Fast settling time	15ns To 0.1%
All Hostile Crosstalk	-84dB @ 5MHz, -54dB @ 50MHz
Channel Crosstalk	-56dB @ 100MHz
Slew Rate	1000 V/us, G=+1,2 V Step
High OFF Isolation	-100dB @ 10MHz
Output Current	100 mA
Low power CMOS	550 uA Quiescent Current
Controls	IR Remote Controller(38KHz), Front panel selection buttons with LED readout and RS-232 PC control
Safety Approvals	CE, FCC, VCCI
Dimension (WxDxH)	17.32" x 7.80" x 1.73" (440mm x 200mm x 44mm)
Weight	2.45 kg / 5.4 lb
Power Voltage Input	DC 12V @ 2A

© 2015 Copyrighted All Rights Reserved.

SB-8802LCM

8x8 COMPONENT VIDEO MATRIX SWITCHER

Input : 8x Component Video (YPBPR)
Output : 8x Component Video (YPBPR)

COMPONENT MATRIX PRO

Ear Rack : 1U-440L

INTRODUCTION

SB-8802 is a high speed Video Bandwidth 325MHz Maximum 380MHz Matrix Router Switcher product. It's one of the most innovative Component Video (YPbPr), Matrix switching products on the market today. Support 19 inch Ear mount pair part number #1U-440L. It has 8 individual inputs with 8 individual outputs. Because it is a matrix router, any input may be routed to any output ; or the same input may be routed to all outputs or anycombination.
It completely eliminates the need to constantly move around Component Video, Digital Audio and Stereo Audio input and output cables. This matrix switcher is ideally suited for full HDTV for the resolution of 480p, 720p. Control is provided via front pushbuttons with LED readout or IR remote controller. A RS-232 interface is provided for interfacing with third party control. A Windows-based control software package is included to provide complete control of the SB-8802 from a PC.

DIAGRAM TYPICAL

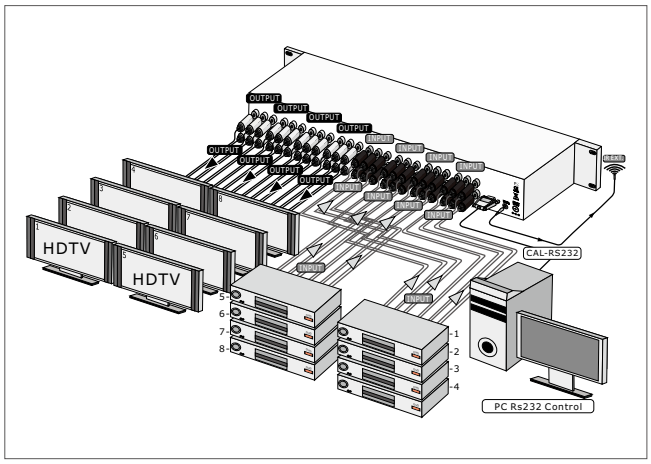

FEATURES

01. Supports 8 inputs to 8 outputs Component Video(YPbPr) Matrix Switcher
02. Input/Output signals via Component Video(YPbPr)
03. Higher Video Bandwidth 325MB each path signals
04. Supported HDTV high definition resolutions 408p, 576i/p, 720p
05. Support 300M long distance IR Extender Remote control port.
06. Compatible with most Component Video devices, Plasma TV display and HDTV
07. Supported RS-232 serial interface protocol commands list
08. Control PC RS-232 Drive compatible with windows 95/98/2000/xp
09. Various User Interface controls:
    - Attached Window based control software for Desktop or NB control by RS-232 port
    - Manual controlled by Front Panel button
    - IR remote control
10. Support desktop with Ear mount and 19 inch 1U High Rack mountable type panel
11. Power supply DC12V, Universal Type Switch 100~240VAC, 50/60Hz

SPECIFICATIONS

Type of Switcher	8 in To 8 out, Component Video (YPbPr) Matrix Switcher
I/O Signals	Component Video (YPbPr) 0.5~1.0Vpp, DDC 5Vpp
Video Bandwidth	325MHz (-3db), 200mVp-p
Video Supported	Higher resolution formats 480i/p, 720p & 1080i/p
Low all hostile crosstalk	-83dB@5MHz
Gain control	60MHz 0.1dB gain flatness
Chassis Material	Metial (T=1mm)
IR Extend Distance	300M IR line cable via IR Remote Control
Controls	IR remote, Select buttons on the front panel & RS-232
PC RS-232 Control	RS-232 interface serial via DRV on a PC
Safety Approvals	CE, FCC, VCCI
Dimension (WxDxH)	19" x 7.87" x 1.75" (482mm x 200mm x 44mm)
Power Supply	DC12V / 2A (consumption 1.6A Max) Use Universal Switch Type 50/60Hz,100~240 VAC
Weight	2.45 Kgs / 5.4 lb

© 2015 Copyrighted All Rights Reserved.

SB-5588LCM

8x8 COMPONENT · DIGITAL · AUDIO MATRIX SWITCHER

Input : 8x COMPONENT(YPBPR), DIGITAL AUDIO (PCM), Stereo Audio (AR/AL)
Output : 8x COMPONENT(YPBPR), DIGITAL AUDIO (PCM), Stereo Audio (AR/AL)

COMPONENT | MATRIX | PRO | VOLUME | BALANCE

Ear Rack : 2U-440L

INTRODUCTION

SB-5588 is a high speed Video Bandwidth 325MHz Matrix Router Switcher product. It's one of the most innovative Component Video (YPbPr), Digital Audio (PCM) and Stereo Audio (AR/AL) switching products on the market today. Stereo Audio output support the Volume control (+0~+100 levels) and Balance adjusting (L=0~50, R=51~100) function. Support 19 inch Ear mount pair part number #2U-440L. It has 8 individual inputs with 8 individual outputs. Because it is a matrix router, any input may be routed to any output; or the same input may be routed to all outputs or any combination. It completely eliminates the need to constantly move around Component Video, Digital Audio and Stereo Audio input and output cables. This matrix switcher is ideally suited for full HDTV for the resolution of 480p, 720p. Control is provided via front pushbuttons with LED readout or IR remote controller. A RS-232 interface is provided for interfacing with third party control. A Windows-based control software package is included to provide complete control of the SB-5588 from a PC.

DIAGRAM TYPICAL

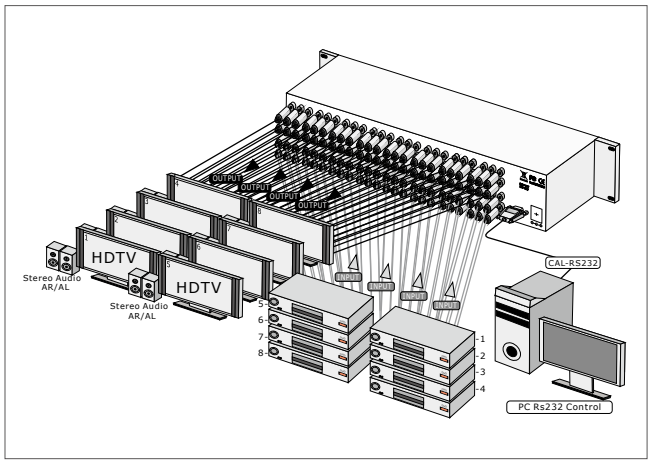

FEATURES

01. Support 8 inputs to 8 outputs Component-Digital-Audio Matrix Switcher
02. Support HDTV Resolution 480i, 480p, 576p, 720p
03. Video Bandwidth : 325MHz (-3dB), 200 mVp-p
04. Excellent Video(Component), Digital Audio and Stereo Audio Performance
05. Audio Frequency Respond : 20Hz ~ 20KHz
06. Stereo Audio output support Volume(+0~+100 levels) and Balance (L50~R50) control function.
07. Low all hostile crosstalk of -83dB @ 5MHz
08. Excellent ESD rating : exceeds 4000 V human body model
09. Switching Component Video YPbPr, Digital Audio(PCM) and Audio signals
10. Suitable for full HD high resolution Video player device and LCD/Plasma monitor displays
11. Direct selection and confirm via Front pushbuttons with LED readout
12. Infrared : IR remote control (38KHz)
13. Support RS-232 interface control driver for 95/98/2000/xp A Windows-based control software Driver packaged
14. RS-232 protocol list with manual attached
15. Enclosure type : Support 19 inch Ear & 2RU Rack mountable pane
16. Support Lower power consumed full load under 1500 mA
17. Power supply offer a universal type 100~240 VAC switch

SPECIFICATIONS

Type of switcher	8 inputs to 8 outputs Component-Digital-Audio Matrix Switcher
Video Bandwidth	325MHz, (-3dB) 200 mV p-p, 380MHz, (-3dB) 2V p-p, R=325MHz, G=325MHz, B=325MHz, Digital=110MHz, Audio=60MHz
Audio Bandwidth	60MHz, (-3dB) (Audio-Right=60MHz, Audio-Lift=60MHz)
Audio Frequency Respond	20Hz ~20KHz
Audio Volume control	+0 ~ +100 levels (+6db)
Audio Balance control	L=+0 ~ +50, R=+51 ~ +100
Gain Flatness	90MHz, 0.1dB
Differential Gain Error	0.01%, 0.1dB
Differential Phase Error	0.02, 0.1dB (RL=150W)
Fast settling time	15ns To 0.1%
All Hostile Crosstalk	-83dB @ 5MHz, -54dB @ 50MHz
Slew Rate	1000 V/us, G=+1,2 V Step
High OFF Isolation	-100dB @ 10MHz
Output Current	100 mA
Low power CMOS	550 uA Quiescent Current
Controls	IR Remote Controller(38KHz), Front panel selection buttons with LED readout and RS-232 PC control
Safety Approvals	CE, FCC, VCCI
Dimension (WxDxH)	17.32" x 7.80" x 3.43" (440mm x 200mm x 88mm)
Weight	3.4 kg / 7.5 lb
Power Voltage Input	DC 12V @ 2A

© 2015 Copyrighted All Rights Reserved.

SB-5588CT

8x8 COMPONENT-DIGITAL-AUDIO CAT5 MATRIX SWITCHER

Input : 8x Component Video(YPBPR)-Digital(Audio)-Stereo Audio(AR/AL)
Output : 8x CAT5 (Component-Digital-Audio), 1x Component-Digital-Audio Preview port

SWITCHER MATRIX PRO CAT5 EXTENDER

Ear Rack : 2U-440L

INTRODUCTION

The SB-5588CT is a true Matrix Routing Switcher for Component Video(YPbPr) Digital Audio(PCM)/Stereo Audio signals. It is an 8 individual Component Video(YPbPr)/Digital Audio(PCM)/Stereo Audio(AR/AL) inputs and 8 individual CAT5 Digital Audio(PCM)/Stereo Audio(AR/AL) outputs. And one(1) Preview output port. Because it is a matrix router, any input may be routed to any output; or the same input may be routed totally outputs or any combination. It completely eliminates the need to constantly move around audio and video input cables and output category (RJ-45) cables. The SB-5588CT is useful for Matrix signals from A/V source devices (such as: VCRs, Camcorders, Video Game Consoles, Video CD players, DVD players, Satellite Receivers, CATV Set Top Boxes, etc.) To AV destination devices over CAT5 cables (such as: LCD TV, Plasma TV Monitors, HDTV Sets, Video Projectors, etc.)Control inputs via the front panel push buttons or an Infrared Remote Control unit or RS-232 control by a computer. The RS-232 will support via Ethernet(optional) control by computer, The preview output is provide via output#1 on the same time and picture.

DIAGRAM TYPICAL

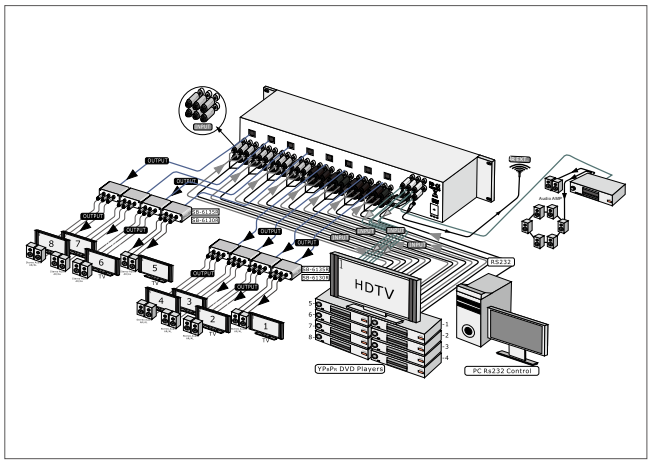

FEATURES

01. Support 8 inputs to 8 outputs Component over CAT5 Output Matrix Switcher
02. Input signals support Component Video(YPbPr), Digital Audio, Stereo Audio
03. Output Signals via CAT5 category cable to HDTV, HD LCD displays
04. Support HDTV high definition resolutions 408p, 576i/576p, 720p
05. Higher Video Bandwidth 325MB each path signals
06. The Digital Audio (PCM) and Composite Video compliant
07. Compatible with all Component Video devices, Plasma TV display and HDTV
08. Switching Component Video YPbPr, Digital Audio (PCM) and Audio signals
09. Suitable for full HD high resolution Video player device and LCD/Plasma monitor displays
10. Direct selection and confirm via Front pushbuttons with LED readout
11. Various User Interface controls:
    - Attached Window based control software for Desktop or NB control by RS-232 port
    - Manual control by Front Panel button
    - IR remote control
    - RS-232 via Ethernet by Optional
    - Video via Ethernet by Optional
    - IR Extender
12. Support PC RS-232 Drive compatible with Win-95/98/2000/XP A Windows-based control software Driver packaged
13. RS 232 protocol list with manual attached
14. Enclosure type : Support 19 inch Ear & 2RU Rack mountable pane
15. Support Lower power consumed full load under 1500 mA
16. Power supply offer a universal type 100~240 VAC switch

SPECIFICATIONS

Type of Switcher	8 in to 8 out, Component Video-Digital-Audio Matrix Switcher
Input ports:A Group	1x Component Video (YPbPr) 0.5~1.0Vpp, DDC 5Vpp, 1x Digital Audio (PCM), Via 1x RCA connector, 1x Stereo Audio (AR/AL), Via 2x RCA connector(Red/white)
Output ports:A Group	1x CAT5 : Component Video (YPbPr) 0.5~1.0Vpp, DDC 5Vpp, Via 1x RJ45 CAT5 connector 1x CAT5 : Digital Audio (PCM) and Stereo Audio (AR/AL) Via 1x RJ45 CAT5 connector
Video Bandwidth	450MHz (-3dB), 200mVp-p
Video Support	Higher resolution formats 480i/p, 720p & 1080i/p
Audio Support	Digital Audio(PCM) and Stereo Audio(AR/AL)
Low all hostile crosstalk	-83dB@5MHz
Controls	IR remote, Select buttons on the front panel & RS-232
PC RS-232 Control	RS-232 interface serial via DRV on a PC
Gain control	60MHz 0.1dB gain flatness
Chassis Material	Metal thin=1mm
Safety Approvals	CE, FCC, VCCI, REACH, Erp, WEEE
Dimension (WxDxH)	19" x 7.87" x 3.46" (482mm x 200mm x 88mm)
Power Supply	DC12V / 3A (consumption 2.25A Max) Use Universal Switch Type 50/60Hz,100~240 VAC
Weight	3.25 Kgs / 7.15 lb

© 2015 Copyrighted All Rights Reserved.

SB-3776

1x2 COMPONENT VIDEO DISTRIBUTION AMPLIFIER

Input : 1x Component(YPBPR)
Output : 2x Component(YPBPR)

COMPONENT AMPLIFIER

INTRODUCTION

SB-3776 is a high speed Video Bandwidth small signal 300MHz large signal 320MHz Distribution Amplifier product. It's one of the most innovative Component Video(YPbPr),Distribution Amplifier product on the market today. Support wall mount pair part type. It has 1 individual input with 2 individual outputs. Because it is a Component Video amplifier, the input may be distribution to any two outputs. It completely eliminates the need to constantly move around Component Video input and output cables. This distribution amplifier is ideally suited for full HDTV for the resolution of 480p, 720p 1080i. Control is provided power switch via front pushbuttons with LED readout remote controller.

DIAGRAM TYPICAL

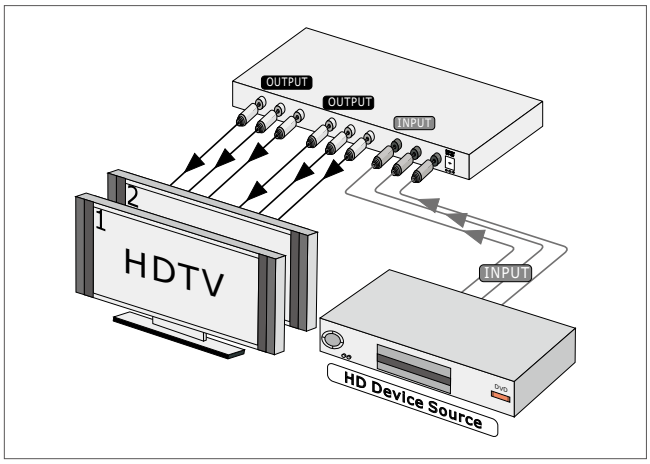

FEATURES

01. Support 1 input to 2 outputs Component Video Distribution Amplifier
02. Support HDTV Resolution 480i, 480p, 576p, 720p, 1080i and 1080p
03. Video Bandwidth : 250MHz (-3dB), 200 mVp-p
04. Low all hostile crosstalk of -83dB @ 5MHz
05. Signals switch including: Component Video YPbPr Signals
06. Suitable for full HD high resolution video player device and LCD/Plasma monitor displays
07. Power switch direct ON/OFF via Front pushbuttons with LED readout
08. Enclosure type : Support wall Rack mountable panel
09. Support Lower power consumed full load under 175 mA
10. Power supply offer a universal type 100~240 VAC switch

SPECIFICATIONS

Type of Amplifier	1 input to 2 outputs Component Video Distribution Amplifier
Video Bandwidth	250MHz, (-3dB) 200 mV p-p, 300MHz, (-3dB) 2V p-p, R=250MHz, G=250MHz, B=250MHz
All Hostile Crosstalk	-84dB @ 5MHz, -54dB @ 50MHz
Channel Crosstalk	-56dB @ 100MHz
Slew Rate	1000 V/us, G=+1,2 V Step
Controls	Power switch on front panel selection buttons with LED readout
Safety Approvals	CE, FCC, VCCI
Dimension (WxDxH)	6.93" x 3.15" x 1.00" (176mm x 80mm x 25mm)
Weight	0.5 kg / 1.1 lb
Power Voltage Input	DC 12V @ 1A

© 2015 Copyrighted All Rights Reserved.

SB-3729

1x2 COMPONENT-AUDIO DISTRIBUTION AMPLIFIER

Input : 1x Component(YPBPR), Stereo Audio(AR/AL)
Output : 2x Component(YPBPR), Stereo Audio(AR/AL)

COMPONENT AUDIO AMPLIFIER

INTRODUCTION

SB-3729 is a high speed Video Bandwidth small signal 400MHz and large signal 450MHz one input to two outputs distribution amplifier product. It's one of the most innovative Component Video(YPbPr) and Stereo Audio (AR/AL) Distribution Amplifier product on the market today. It has 1 individual input with 2 individual outputs. Because it is a distribution amplifier, the input may be distributed to any two outputs; it completely eliminates the need to constantly move around Component Video and Stereo Audio input and output cables. This Distribution Amplifier is ideally suited for full HDTV for the resolution of 480p, 720p. Control is provided power switch via front on/off switch.

DIAGRAM TYPICAL

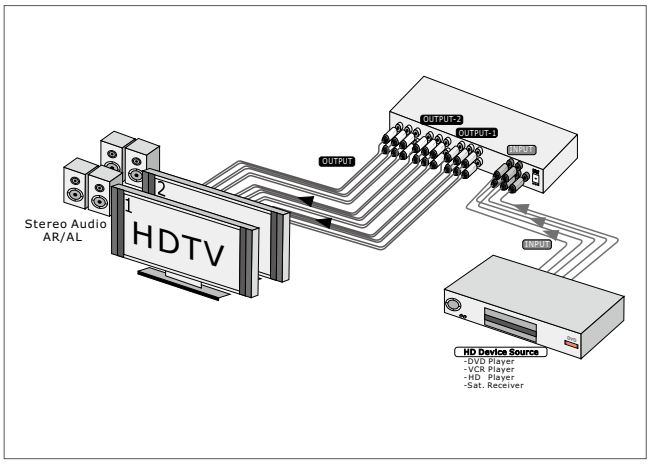

FEATURES

01. Support 1 input to 2 outputs Component-Audio Distribution Amplifier
02. Support HDTV Resolution 480i, 480p, 576p, 720p
03. Video Bandwidth : 450MHz (-3dB), 200 mVp-p
04. Audio bandwidth : 60MHz
05. Audio Frequency Respond : 20Hz ~ 20KHz
06. Low all hostile crosstalk of -83dB @ 5MHz
07. Signals switch including: Component Video YPbPr, Stereo Audio (AR/AL) signals
08. Suitable for full HD high resolution Video player device and LCD/Plasma monitor displays
09. Direct selection power switch via Front panel
10. Support Lower power consumed full load under 450 mA
11. Power supply offer a universal type 100~240 VAC switch

SPECIFICATIONS

Type of switcher	1 input to 2 outputs Component-Audio Distribution Amplifier
Video Bandwidth	400MHz, (-3dB) 200 mV p-p, 450MHz, (-3dB) 2V p-p, R=450MHz, G=450MHz, B=450MHz, Audio=60MHz
Audio Bandwidth	60MHz, (-3dB)(Audio-Right=60MHz, Audio-Lift=60MHz)
Audio Frequency Respond	20Hz ~20KHz
All Hostile Crosstalk	-84dB @ 5MHz, -54dB @ 50MHz
Channel Crosstalk	-56dB @ 100MHz
Slew Rate	1000 V/us, G=+1,2 V Step
Controls	Power switch via Front panel switch LED readout
Safety Approvals	CE, FCC, VCCI
Dimension (WxDxH)	4.33" x 3.14" x 1.57" (110mm x80mm x40mm)
Weight	0.65 kg / 1.43 lb
Power Voltage Input	DC 12V @420mA

© 2015 Copyrighted All Rights Reserved.

SB-3730

1x4 COMPONENT-AUDIO DISTRIBUTION AMPLIFIER

Input : 1x Component(YPBPR), Stereo Audio(AR/AL)
Output : 4x Component(YPBPR), Stereo Audio(AR/AL)

COMPONENT AUDIO DISTRIBUTOR

Ear Rack : 1U-300L

INTRODUCTION

SB-3730 is a high speed Video Bandwidth small signal 300MHz large signal 320MHz Distribution Amplifier product. It's one of the most innovative Component Video(YPbPr),and Stereo Audio(AR/AL) Distribution Amplifier product on the market today. Support 19 inch Ear mount pair part number #1U-300L. It has 1 individual input with 4 individual outputs. Because it is a Component Video and Audio amplifier, the input may be distribution to any output; it completely eliminates the need to constantly move around Component Video and Stereo Audio input and output cables. This Distribution Amplifier is ideally suited for TV for resolution 480p, 720p. Control is provided power switch via front pushbuttons with LED readout remote controller.

DIAGRAM TYPICAL

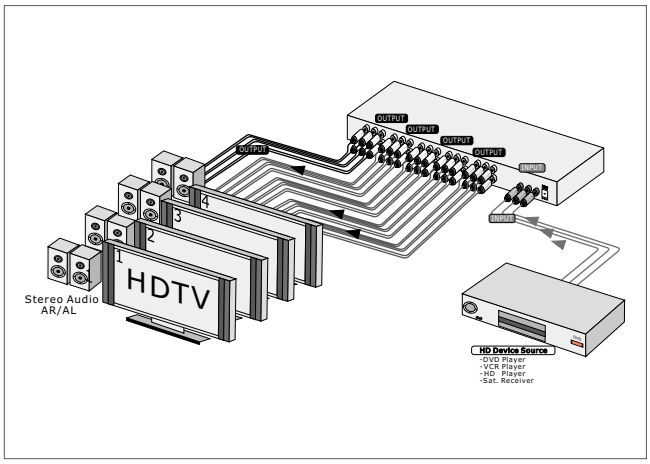

FEATURES

01. Support 1 input to 4 outputs Component-Audio Distribution Amplifier
02. Support HDTV Resolution 480i, 480p, 576p, 720p
03. Video Bandwidth : 300MHz (-3dB), 200 mVp-p
04. Audio bandwidth : 60MHz
05. Audio Frequency Respond : 20Hz ~ 20KHz
06. Low all hostile crosstalk of -83dB @ 5MHz
07. Signals switch including: Component Video YPbPr, Stereo Audio (AR/AL) signals
08. Suitable for full HD high resolution Video player device and LCD/Plasma monitor displays
09. Direct selection power switch via front pushbuttons with LED readout
10. Enclosure type : Support 19 inch Ear & 1RU Rack mountable panel
11. Support Lower power consumed full load under 450 mA
12. Power supply offer a universal type 100~240 VAC switch

SPECIFICATIONS

Type of switcher	1 input to 4 outputs Component-Audio Distribution Amplifier
Video Bandwidth	300MHz, (-3dB) 200 mV p-p, 380MHz, (-3dB) 2V p-p, R=300MHz, G=300MHz, B=300MHz, Audio=60MHz
Audio Bandwidth	60MHz, (-3dB)(Audio-Right=60MHz, Audio-Lift=60MHz)
Audio Frequency Respond	20Hz ~20KHz
All Hostile Crosstalk	-84dB @ 5MHz, -54dB @ 50MHz
Channel Crosstalk	-56dB @ 100MHz
Slew Rate	1000 V/us, G=+1,2 V Step
Controls	Power switch via front panel selection buttons with LED readout
Safety Approvals	CE, FCC, VCCI
Dimension (WxDxH)	11.97" x 6.06" x 1.73" (304mm x 154mm x 44mm)
Weight	1.4 kg / 3.08 lb
Power Voltage Input	DC 12V @ 1A

© 2015 Copyrighted All Rights Reserved.

SB-3737

1x8 COMPONENT VIDEO-AUDIO DISTRIBUTION AMPLIFIER

Input : 1x COMPONENT(YPBPR), Stereo Audio (AR/AL)
Output : 8x COMPONENT(YPBPR), Stereo Audio (AR/AL)

COMPONENT AUDIO PRO DISTRIBUTOR

Ear Rack : 1U-440L

INTRODUCTION

SB-3737 is a high speed Video Bandwidth small signal 700MHz large signal 440MHz Distribution Amplifier product. It's one of the most innovative Component Video(YPbPr), and Stereo Audio(AR/AL) Distribution Amplifier product on the market today. Support 19 inch Ear mount pair part number #1U-440L. It has 1 individual input with 8 individual outputs. Because it is a Component Video and Audio amplifier, the input may be distribution to any output; it completely eliminates the need to constantly move around Component Video and Stereo Audio input and output cables. This Distribution Amplifier is ideally suited for TV for the resolution of 480p, 720p. Control is provided power switch via front pushbuttons with LED readout.

DIAGRAM TYPICAL

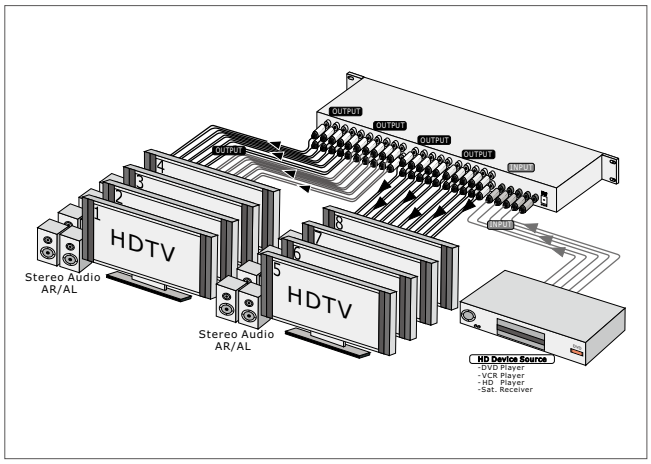

FEATURES

01. Support 1 input to 8 outputs Component-Audio Distribution Amplifier
02. Support HDTV Resolution 480i, 480p, 576p, 720p
03. Video Bandwidth : Small Signal 700MHz, Large Signal 440MHz
04. Audio bandwidth : 60MHz
05. Audio Frequency Respond : 20Hz ~ 20KHz
06. Low all hostile crosstalk of -83dB @ 5MHz
07. Signals switch including: Component Video YPbPr, Stereo Audio (AR/AL) signals
08. Suitable for full HD high resolution Video player device and LCD/Plasma monitor displays
09. Direct selection power switch via Front pushbuttons with LED readout
10. Enclosure type : Support 19 inch Ear & 1RU Rack mountable panel
11. Support Lower power consumed full load under 650 mA
12. Power supply offer a universal type 100~240 VAC switch

SPECIFICATIONS

Type of switcher	1 input to 8 outputs Component-Audio Distribution Amplifier
Video Bandwidth	Small Signal 700MHz, Large Signal 440MHz, R=440MHz, G=440MHz, B=440MHz
Audio Bandwidth	60MHz (-3dB) (Audio-Right=60MHz, Audio-Lift=60MHz)
Audio Frequency Respond	20Hz ~20KHz
All Hostile Crosstalk	-84dB @ 5MHz, -54dB @ 50MHz
Channel Crosstalk	-56dB @ 100MHz
Slew Rate	1000 V/us, G=+1,2 V Step
Controls	Power switch via Front panel selection buttons with LED readout
Safety Approvals	CE, FCC, VCCI, Erp, WEEE
Dimension (WxDxH)	17.32" x 7.87" x 1.73" (440mm x 200mm x 44mm)
Weight	2.45 kg / 5.4 lb
Power Voltage Input	DC 12V @ 2A

© 2015 Copyrighted All Rights Reserved.

SB-3733

1x8 COMPONENT-DIGITAL-AUDIO(1000MB) DISTRIBUTION AMPLIFIER

Input : 1x Component Video (YPBPR), Digital, Stereo Audio(AR/AL)
Output : 8x Component Video (YPBPR), Digital, Stereo Audio(AR/AL)

COMPONENT AUDIO PRO DIGITAL DISTRIBUTOR

Ear Rack : 1U-440L

INTRODUCTION

SB-3733 is a high speed Video Bandwidth small signal 700MHz large signal 1000MHz Distribution Amplifier product. It's one of the most innovative Component Video (YPbPr), Digital Audio(PCM) and Stereo Audio(AR/AL) with 8x outputs function distribution amplifier product on the market today. Support 19 inch Ear mount pair part number #1U-440L. It has 1 individual input with 8 individual outputs. Because it is a Component Video/Digital and Stereo Audio amplifier, 1 input can be distribution to any 8 outputs. It completely eliminates the need to constantly move around Component Video, Digital Audio and Stereo Audio input and output cables. This distribution amplifier is ideally suited for TV for resolution 480p, 720p. Control is provided power switch via front pushbuttons with LED readout.

DIAGRAM TYPICAL

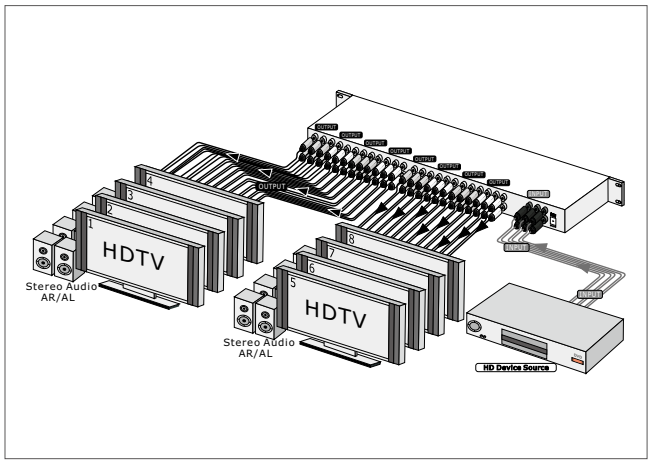

FEATURES

01. Support 1 input to 8 outputs Component-Digital-Audio Distribution Amplifier
02. Support HDTV Resolution 480i, 480p, 576p, 720p
03. Video Bandwidth : Small signal 1000MHz, (-3dB), Large signal 440MHz
04. Digital Audio bandwidth : 110MHz. compatible Composite Video in/out
05. Audio Frequency Respond : 20Hz ~ 20KHz
06. Low all hostile crosstalk of -83dB @ 5MHz
07. Signals amplifier including : Component Video YPbPr, Digital Audio(S/PDIF) Stereo Audio (AR/AL) signals
08. Suitable for full HD high resolution Video player device and LCD/Plasma monitor displays
09. Direct selection power switch via Front pushbuttons with LED readout
10. Enclosure type : Support 19 inch Ear & 1RU Rack mountable panel
11. Support Lower power consumed full load under 800 mA
12. Power supply offer a universal type 100~240 VAC switch

SPECIFICATIONS

Type of amplifier	1x input to 8x outputs Component-Digital-Audio Distribution Amplifier
Video Bandwidth	Small signal 1000MHz, (-3dB), Large signal 700MHz, R=700MHz, G=700MHz, B=700MHz, Digital=110MHz, Audio=60MHz
Audio Bandwidth	60MHz, (-3dB)(Audio-Right=60MHz, Audio-Lift=60MHz)
Audio Frequency Respond	20Hz ~20KHz
All Hostile Crosstalk	-84dB @ 5MHz, -54dB @ 50MHz
Channel Crosstalk	Channel Crosstalk : -56dB @ 100MHz
Slew Rate	1000 V/us, G=+1,2 V Step
Controls	Switch power via Front panel selection buttons with LED readout
Safety Approvals	CE, FCC, VCCI
Dimension (WxDxH)	17.32" x 7.87" x 1.73" (440mm x 200mm x 44mm)
Weight	2.45 kg / 5.4 lb
Power Voltage Input	DC 12V @ 2A

© 2015 Copyrighted All Rights Reserved.

SB-3750 · SB-3750M

1x5 COMPONENT · DIGITAL · VIDEO · S-VIDEO · AUDIO DISTRIBUTION AMPLIFIER

Input : 1x Component Video(YPBPR), Digital Audio, S-Video, Composite Video, Stereo Audio
Output : 4x Component Video(YPBPR), Digital Audio, S-Video, Composite Video, Stereo Audio + 1x Loop Output Port

COMPONENT PRO DISTRIBUTOR

SB-3750
1x5 DISTRIBUTION AMPLIFIER (Loop Output)

SB-3750M
1x5 DISTRIBUTION AMPLIFIER (Loop Output)

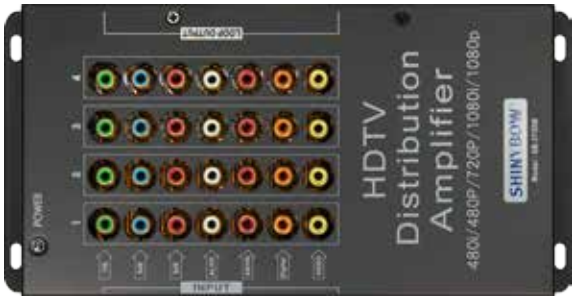

FEATURES

01. Support 1 input to 4 outputs and 1 Loop Output Distribution Amplifier
02. Signals amplifier including:
    - Component Video (YPbPr), Digital Audio (S/PDIF), S-Video(Y/C),
    - Composite Video and Stereo Audio (AR/AL) signals
03. Suitable for full HD high resolution Video player device and LCD/Plasma monitor displays. HDTV Resolution 480i, 480p, 576p, 720p
04. Video Bandwidth : Small signal 700MHz, (-3dB), Large signal 440MHz
05. Digital Audio bandwidth : 110MHz. compatible Composite Video in/out
06. Audio bandwidth : 60MHz. (-3dB).
07. Audio Frequency Respond : 20Hz ~ 20KHz
08. Low all hostile crosstalk of -83dB @ 5MHz
09. Support one Loop Output port, Linkage connection the others 10 amplifier units
10. Enclosure type : Support wall Rack mountable 1 inch high
11. Support Lower power consumed full load under 550 mA
12. Power supply offer a universal type 100~240 VAC switch

SPECIFICATIONS

Type of Amplifier	1 input to 4 outputs and 1 Loop Output Distribution Amplifier
Type of Signals	Component Video (YPbPr), Digital Audio (S/PDIF), S-Video(Y/C), Composite Video and Stereo Audio (AR/AL) signals
Video Bandwidth	Small signal 700MHz, (-3dB), Large signal 380MHz, R=380MHz, G=380MHz, B=380MHz, Digital=110MHz, Audio=60MHz
Audio Bandwidth	60MHz, (-3dB)(Audio-Right=60MHz, Audio-Lift=60MHz)
Audio Frequency Respond	20Hz ~20KHz
All Hostile Crosstalk	-84dB @ 5MHz, -54dB @ 50MHz
Channel Crosstalk	-56dB @ 100MHz
Scan Rates Accepted	50Hz or 60Hz
Loop Output	Support one extend port to the others 10 amplifier units
Safety Approvals	CE, FCC, VCCI
Dimension (WxDxH)	9.06" x 4.49" x 1.06" (230mm x 114mm x 27mm)
Weight	0.7 kg / 1.54 lb
Power Voltage Input	DC 12V @ 2A

DIAGRAM TYPICAL

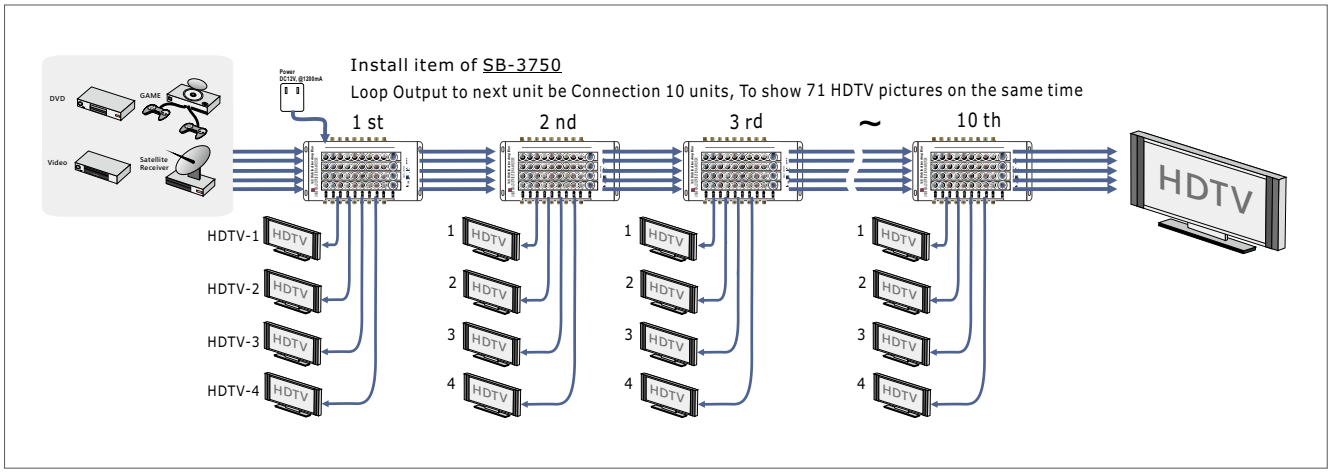

© 2015 Copyrighted All Rights Reserved.

SB-3770

1x8 COMPONENT · DIGITAL · AUDIO DISTRIBUTION AMPLIFIER

Input : 1x Component Video(YPBPR), Digital Audio, Stereo Audio
Output : 7x Component Video(YPBPR), Digital Audio, Stereo Audio (Boost Signal ports) and 1x Loop Output Port

COMPONENT | PRO | AUDIO | DIGITAL | DISTRIBUTOR

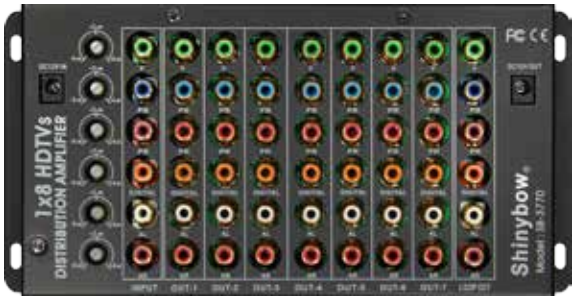

INTRODUCTION

SB-3770 is a high speed Video Bandwidth small signal 700MHz, large signal 380MHz Distribution Amplifier product. It's one of the most innovative Component Video(YPbPr), Digital Audio(PCM) and Stereo Audio(AR/AL) with Loop output function Distribution Amplifier product on the market today. Support wall Rack mount type. It has 1 individual input with 7 individual outputs. Because it is a Component Video/Digital and Stereo Audio Amplifier, the input may be distribution to any output ; it completely eliminates the need to constantly move around Component Video, Digital Audio and Stereo Audio input and output cables. This Distribution Amplifier is ideally suited for TV for resolution 480p, 720p.

FEATURES

01. Support 1x input to 7x outputs with 1x Loop Output Distribution Amplifier
02. Signals amplifier including : Component Video (YPbPr), Digital Audio (S/PDIF), Stereo Audio (AR/AL) signals
03. Suitable for full HD high resolution Video player device and LCD/Plasma monitor displays. HDTV Resolution 480i, 480p, 576p, 720p
04. Video Bandwidth : Small signal 700MHz, (-3dB), Large signal 380MHz
05. Digital Audio bandwidth : 110MHz. compatible Composite Video in/out
06. Audio bandwidth : 60MHz. (-3dB)
07. Audio Frequency Respond : 20Hz ~ 20KHz
08. Boost signal 0~+6dB via upper case 6x VR range volume
09. Support one Loop Output port, Linkage connection the others 10 amplifier units
10. Enclosure type : Support wall Rack mountable 1 inch high
11. Support Lower power consumed full load under 770 mA
12. Power supply offer a universal type 100~240 VAC switch

SPECIFICATIONS

Type of amplifier	1 input to 7 outputs with 1x Loop Output Distribution Amplifier
Type of Signals	Component (YPbPr), Digital (S/PDIF), Stereo Audio signals
Video Bandwidth	Small signal 700MHz, (-3dB), Large signal 380MHz, R=380MHz, G=380MHz, B=380MHz, Digital=110MHz, Audio=60MHz
Audio Bandwidth	60MHz, (-3dB) (Audio-Right=60MHz, Audio-Lift=60MHz)
Audio Frequency Respond	20Hz ~20KHz
All Hostile Crosstalk	-84dB @ 5MHz, -54dB @ 50MHz
Channel Crosstalk	-56dB @ 100MHz
Boost Volume	0~+6dB, Amplifier 7 output ports
Loop Output	Support one extend port to the others 10 amplifier units
Safety Approvals	CE, FCC, VCCI
Dimension (WxDxH)	9.06" x 4.49" x 1.06" (230mm x 114mm x 27mm)
Weight	0.7 kg / 1.54 lb
Power Voltage Input	DC 12V @ 2A

DIAGRAM TYPICAL

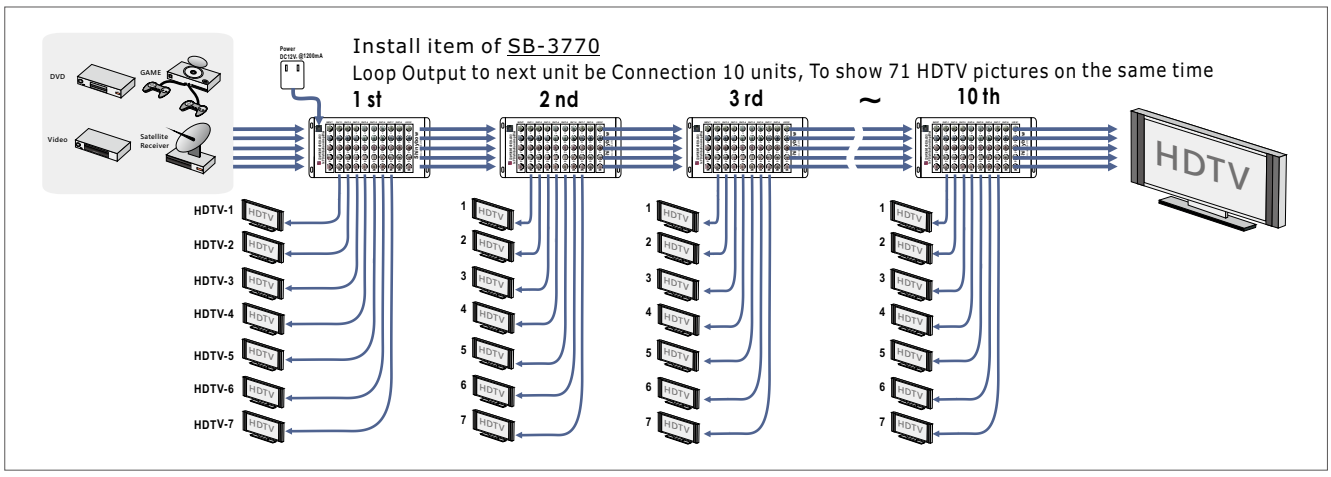

© 2015 Copyrighted All Rights Reserved.

SB-3790 · SB-3780

1x9 COMPONENT · DIGITAL · AUDIO DISTRIBUTION AMPLIFIER

Input : 1x Component Video, Digital Audio, S-Video, Composite Video, Stereo Audio
Output : 8x Component Video, Digital Audio, S-Video, Composite Video, Stereo Audio and 1x Loop Output Port

COMPONENT PRO AUDIO DISTRIBUTOR

SB-3790
1x9 DISTRIBUTION AMPLIFIER (Loop Output)

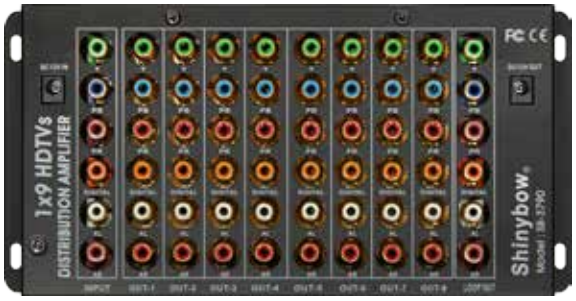

SB-3780
1x9 DISTRIBUTION AMPLIFIER (Loop Output)

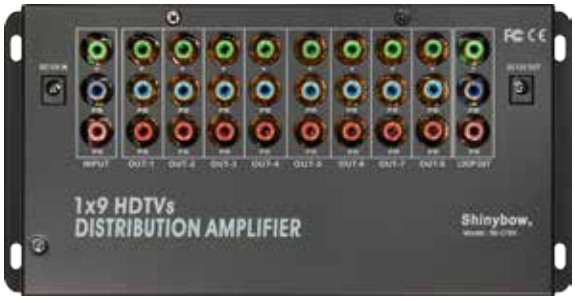

FEATURES

01. Support 1x input to 8x outputs and 1x Loop Output Distribution Amplifier
02. Signals amplifier including : Component Video (YPbPr), Digital Audio (S/PDIF), Stereo Audio (AR/AL) signals
03. Suitable for full HD high resolution Video player device and LCD/Plasma monitor displays. HDTV Resolution 480i, 480p, 576p, 720p
04. Video Bandwidth : Small signal 1000MHz, (-3dB), Large signal 440MHz
05. Digital Audio bandwidth : 110MHz. compatible Composite Video in/out
06. Audio bandwidth : 60MHz. (-3dB)
07. Audio Frequency Respond : 20Hz ~ 20KHz
08. Low all hostile crosstalk of -83dB @ 5MHz
09. Support one Loop Output port, Linkage connection the others 10 amplifier units
10. Enclosure type : Support wall Rack mountable 1 inch high
11. Support Lower power consumed full load under 800 mA
12. Power supply offer a universal type 100~240 VAC switch

SPECIFICATIONS

Type of amplifier	1 input to 8 outputs and 1x Loop Output Distribution Amplifier
Type of Signals	Component (YPbPr), Digital(S/PDIF), Stereo Audio signals
Video Bandwidth	Small signal 700MHz, (-3dB), Large signal 380MHz, R=380MHz, G=380MHz, B=380MHz, Digital=110MHz, Audio=60MHz
Audio Bandwidth	60MHz, (-3dB)(Audio-Right=60MHz, Audio-Lift=60MHz)
Audio Frequency Respond	20Hz ~20KHz
All Hostile Crosstalk	-84dB @ 5MHz, -54dB @ 50MHz
Channel Crosstalk	-56dB @ 100MHz
Slew Rate	1000 V/us, G=+1,2 V Step
Loop Output	Support one extend port to the others 10 amplifier units
Safety Approvals	CE, FCC, VCCI
Dimension (WxDxH)	9.06" x 4.49" x 1.06" (230mm x 114mm x 27mm)
Weight	0.7 kg / 1.54 lb
Power Voltage Input	DC 12V @ 2A

DIAGRAM TYPICAL

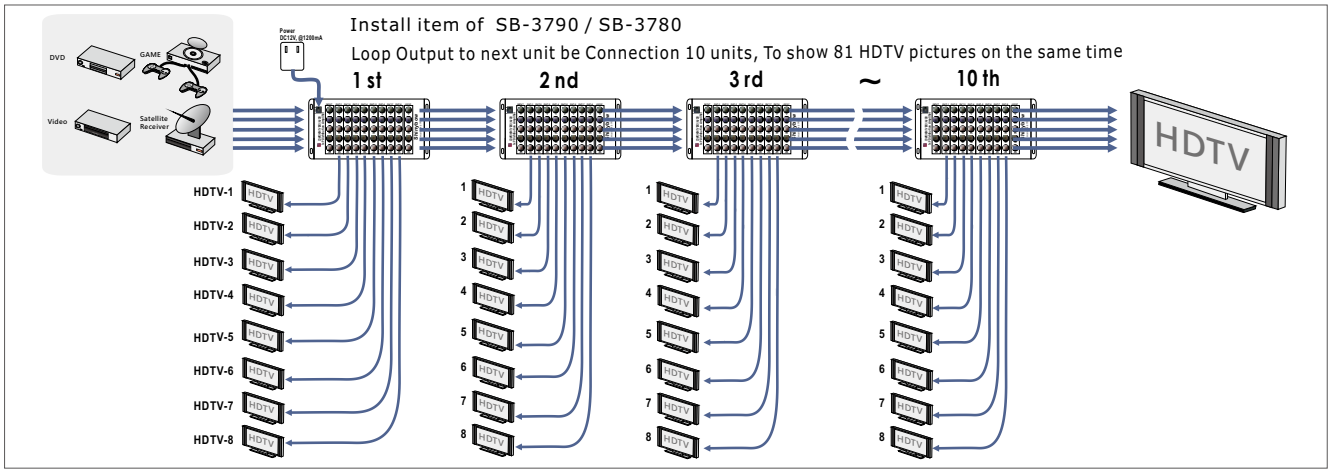

© 2015 Copyrighted All Rights Reserved.