SB-6800T/SB-6800R

HDMI OVER IP CHANNEL Extender

IR | RS-232 | 500M

SB-6800T
HDMI OVER IP Channel Transmitter

Input : 1x HDMI with Looping Output
Output : 1x LAN
Controls : IR, RS-232, Front Panel Buttons

Ear Rack :#WM-1INCH-130MM

SB-6800R
HDMI OVER IP Channel Receiver

Input : 1x LAN
Output : 1x HDMI
Controls : IR, RS-232, Front Panel Buttons

Ear Rack :#WM-1INCH-130MM

FEATURES

01. Extend HDMI signal over IP (LAN Switch with IGMP function) category cable up to 100M
02. Simply set up the Transmitter and Recevier to the same channel and all settings are automatically configured
03. Support point to point or point to multipoint or multipoint to multipoint configurations
04. Support HDMI 1080p@60 video, HDCP compliant
05. Support link speeds of up to 148MHz
06. Deep Color, Full HD 1080p@60Hz@24 bit pixels
07. Support Digital Audio 7.1 LPCM 192KHz, 24bits, Full HD Dolby TrueHD and DTS-HD Master Audio uncompressed HD audio formats
08. Support IP Transmitter (5) units to IGMP HUB. Channel 001~005
09. Support IP Receiver (64) units, Select TX Channel 001~064
10. Transfer IR and RS-232 control signal together with the HDMI signal
11. With LED indicators to show the POWER/LINK/Transmitter Channel status
12. Uses a single category cable to transmit HDMI, RS-232 and IR control signals simultaneously
13. Surface mounting bracket included
14. Univeral Worldwide Power Supply 50/60Hz,100~240VAC

SPECIFICATIONS

Type of Extender	HDMI Over IP Extender
Input Signals	HDMI
Signal Supports	HDMI 1.3 HDMI format Standard, DVI and HDCP Compliant
Video Support	HDMI for 1080p (1920x1080) resolution
HDMI Audio I/O Supports	Multi Audio Formats 5.1 / 7.1, MAT(MLP), Dolby Digital, Dolby TrueHD, Dolby Digital Plus, DTS, DTS-ES 6.1, DTS-HD, DTS-HD-HRA, DTS-HD Master, (PCM-2CH)
Extend LAN Hub	LAN Switch with IGMP function
GB Hub Linkage	IP Transmitter x5 units & IP Receiver x 64units (500M)
Cable Support	Category (CAT5e/6) cable
Support HDMI resolutions	480p, 720p 1080i/1080p
Controls	2x IR in, 1x RS-232 I/O and LAN series interface
Transfer distance	up to 100M (328 ft) LAN Switch to LAN Switch(maximum 500M(1640ft))
HDMI I/O connectors	HDMI Type A - SMD 19pin Female Type
Safety Approvals	CE
Dimension (WxDxH)	5.31" x 5.11" x 1" (135mm x 130mm x 26mm)
Weight	0.4175 kg / 0.9125 lb
Power consumption	Max. 2000mA
Power Supply	Power Input +12VDC, 2A (Universal Type 50/60Hz, 100~240 VAC)

DIAGRAM TYPICAL

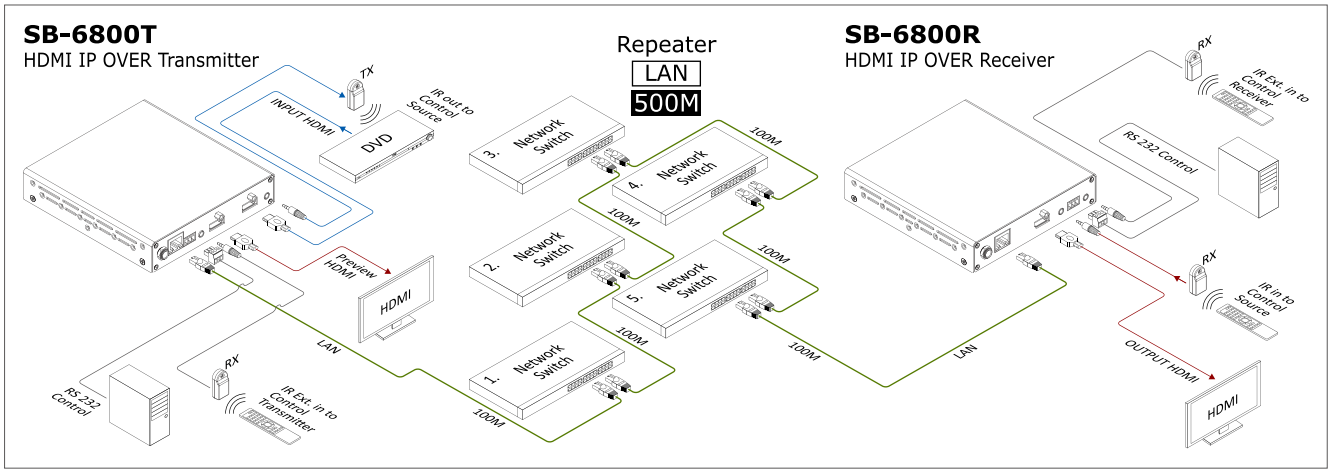

© 2015 Copyrighted All Rights Reserved.

SB-6314 · SB-6312

Channel IP Router

CAT5

SB-6314
5 Channel IP Router

I/O : 5 ports Router

SB-6312
3 Channel IP Router

I/O : 3 ports Router

FEATURES

01. Support 4x ways HDMI CAT5/6 Repeater Extender
02. Support Auto-Polarity for 10Mbps
03. Support Link quality LED for 100Mbps
04. Support direct, serial and dual color LED
05. Built in Linear regulator control register
06. Support auto power saving mode
07. It Provides powerful QoS function, IEEE 802.1Q, IGMP snooping
08. HDMI Signals Link via using the CAT5, CAT5e and ACT6e UTP cable
09. Support link speeds of up to 3.4 Gbps
10. Broadcast storm protection
11. Transmission HDMI Signals
12. Long distance 100M between Transmitter and Receiver
13. Mounting easy for Wall mountable Easy to install without any adjustment
14. Power support DC input with Low power consumes (Full load 250mA)
15. power supply using universal power switch DC 12V/0.42mA~660mA

SPECIFICATIONS

Type of Repeater	4x port CAT5/6 Outputs Repeater
Transmission Signals	HDMI Signals
CAT5 cable	CAT5, CAT5e, CAT6e category cable
Signal Isolation	90db@10Mbps
Operating Temperature	0 C to 70 C
Extend Repeat distance	Up to 100M
Enclosure	Ear-wall mount rackable
Safety Approvals	CE, FCC
Dimension (WxDxH)	6.93" x 3.15" x 1" (176mm x 80mm x 25mm)
Weight	0.85 kg / 1.42 lb
Power Supply	Power switch supply +12VDC / 0.42mA~660mA

DIAGRAM TYPICAL

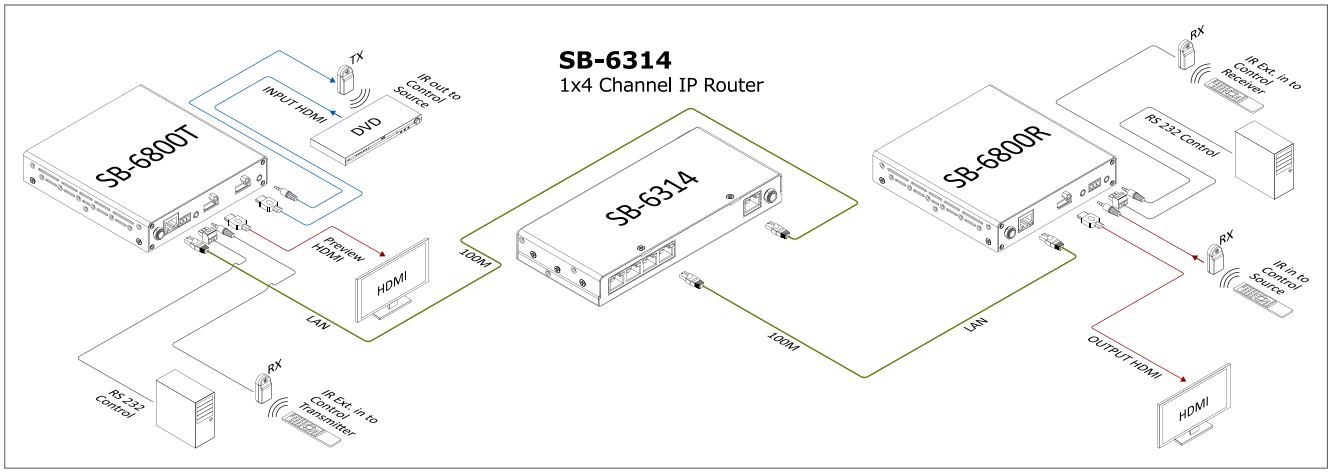

© 2015 Copyrighted All Rights Reserved.

SB-6700

HDMI TO DTV RF HD MODULATOR

Input : 1x HDMI, 1x USB, 1x Ethernet
Output : 1x Coaxial

Ear Rack :#WM-1INCH-130MM

INTRODUCTION

SB-6700 is a encoder and modulator that allows HD signals input in TV distribution. SB-6700 is a ideal for distributing any HD video to All TV's over existing Coax Cable, supporting HDMI™, USB, Ethernet input and RF output. It is all in one device integrating MPEG2 encoding. Supports HD resolution up to 720p/1080i (1080p-24 film) with Coaxial output standard DVB-T, DVB-C, DVB-S. DVB-T Model supports all world wide modes- 6/7/8 MHZ Bandwidth, South America/NZ/AU/EU. Supports multiple channels by adding more units. The sources could be from satellite receivers, Blue-ray player, PC, Camera, etc... Control is provided via Front panel, IR and USB software at any time.

DIAGRAM TYPICAL

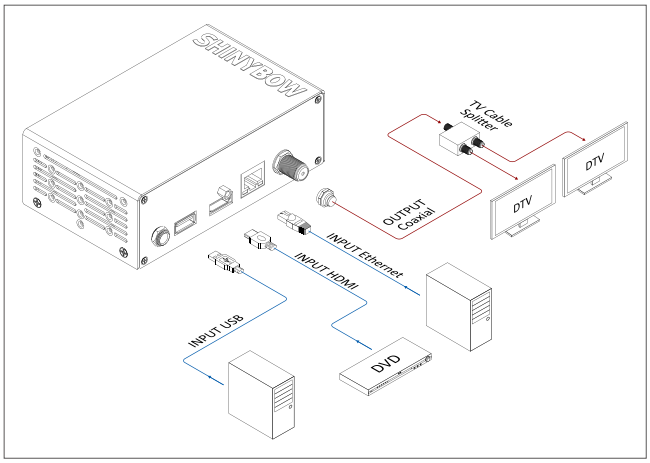

FEATURES

01. HDMI To DTV RF HD Modulator
02. Input supports HDMI, USB and Ethernet
03. Easy to setup TV channel and control through LCM panel
04. Supports world wide mode -6/7/8/ MHZ Bandwidth, South America/NZ/AU/EU
05. Available for Daisy Chain or Coax combiner which can connect multiple units
06. Supports HD resolution up to 720p/1080i (1080p-24 film) with Coaxial output standard DVB-T, DVB-C, DVB-S, ATSC, DTMB
07. Various User Interface controls: Front Panel push button and IR remote control
08. World mounted Ear Rack included
09. Support Universal power adaptor Power input AC100V~AC240V, 50/60Hz

SPECIFICATIONS

Type of Modulator	HDMI To DTV RF HD Modulator
Input	HDMI, USB and Ethernet
Encoding Modes	MPEG2
Coaxial Output	DVB-T, DVB-C, DVB-S, ATSC, DTMB
DVB-T Model	6/7/8/ MHZ Bandwidth, South America/NZ/AU/EU
DVB-C Model	J.83A+J.83B+J.83C+J.83D- all modes supported
Output Resolution	Support 720p/1080i or 1080p-24 film
Constellation	4QAM, 16QAM, 64QAM
Code rate	1/2, 2/3, 3/4, 5/6, 7/8
Guard Interval	1/32, 1/16, 1/8, 1/4
FFT	2K, 4K, 8K
RF Frequency	47~862MHz
HDMI I/O Connector	HDMI Type A - SMD 19pin Female Type
Temperature	Operating Temperature 32°F - 100°F (0°C - 32°C)
Wall Mount	1 inch High Wall Mount pairs (P/N:WM-1INCH-80mm)
Dimension (WxDxH)	8.14" x 4.48" x 1.00" (207mm x 114mm x 25mm)
Power Supply	DC12V, 2A, Powr Input : AC 100~240 VAC 50/60Hz (universal Type Supply)
Safety Approvals	CE, FCC, REACH
Weight	1.85 Kg / 3.08 lb

© 2015 Copyrighted All Rights Reserved.

SB-6335T5/SB-6335R5

HDMI HDBaseT Extender (PoH)

HDMI HDBaseT 4K2K CAPABLE PoH Power Over HDBaseT

LAN | RS-232 | IR in | IR out | 100M

SB-6335T5
HDMI HDBaseT Transmitter (PoH)

Input : 1x HDMI
Output : 1x HDBaseT (PoH)
Controls : IR (in/out), RS-232, LAN

SB-6335R5
HDMI HDBaseT Receiver (PoH)

Input : 1x HDBaseT (PoH)
Output : 1x HDMI
Controls : IR (in/out), RS-232, LAN

Ear Rack :
#WM-1INCH-130MM

FEATURES

01. HDBaseT Extend HDMI with 3D and 4Kx2K over a single UTP/STP cable up to 330ft (100M)
02. Support HDMI 1080p@60 video V1.4a 3D and Ultra HD 4K2K video, CEC / HDCP compliant
03. Support link speeds of up to Video, TMDS format Max. 8.1 Gbit/s, Signal 340MHz
04. Deep Color, Full HD 1080p@60Hz@24/36/48bit/pixels
05. Support 1080p TV's at 24/30/60/100/120 Hz and above as well as Blu-rays at 24 FPS
06. Support Digital Audio 7.1 LPCM 192KHz, 24bits, Full HD Dolby TrueHD and DTS-HD Master Audio uncompressed HD audio formats
07. Transfer Bi-directional Infrared control signal together with the HDMI signal
08. RS-232 port for firmware update or RS-232 control signal transmission
09. Support HDMI CEC between your connected Source and display gear
10. With LED indicators to show the POWER/PoH/HDCP/LINK status
11. 5-Play Transmits HDMI, Audio, PoE, Ethernet, RS-232 and Bi-Directional
12. Support Super Audio CD (DSD), CEC commands protocol table
13. Mounting Ears and wall mount pack supplied
14. Power supply using universal power switch 50/60Hz,100~240VAC

SPECIFICATIONS

Type of Extender	HDBaseT Transmitter for HDMI signal over category UTP/STP Cable
Input Signals	HDMI with Digital Video(TMDS)/Audio 0.5~1.0vPP, DDC 5Vpp
HDBaseT Signal Supports	HDMI 1.4a HDMI format Standard, DVI and HDCP Compliant
Video Support	HDMI and DVI TMDS format for 1920x1200 resolution up to 8.1 Gbps (340MHz), Digital RGB 48bits/px, deep color, 3D
HDMI Audio I/O Supports	Multi Audio Formats 5.1 / 7.1, MAT(MLP), Dolby Digital, Dolby TrueHD, Dolby Digital Plus, DTS, DTS-ES 6.1, DTS-HD, DTS-HD-HRA, DTS-HD Master, (PCM-2CH)
Category Cable Support	CAT5e, CAT6, CAT6a, CAT7 UTP/STP cable
Support HDMI resolutions	480p, 720p 1080i/1080p and Ultra HD 4K2K
Scan Rate Accepted	Support HDMI full HD Resolution; Frequency 24Hz to 120Hz
Controls	1x IR in, 1x IR out, 1x RS-232 I/O and 2x LAN series interface
PoE Support	HDBaseT Transmitter with 48VDC adaptor
Transfer distance	Up to 330ft (100 meters)
HDMI I/O connectors	HDMI Type A - SMD 19pin Female Type
HDBaseT I/O connectors	HDBaseT RJ-45, 8p8c Female socket
Safety Approvals	CE, FCC, VCCI & REACH
Dimension (WxDxH)	5.31" x 5.11" x 1" (135mm x 130mm x 26mm)
Weight	0.4175 kg / 0.9125 lb
Power consumption	Max. 850mA (Full load 1080p-60Hz signal with use DC12V input)
Power Supply	Power Input+12VDC, 2A (Universal Type 50/60Hz, 100~240 VAC)

DIAGRAM TYPICAL

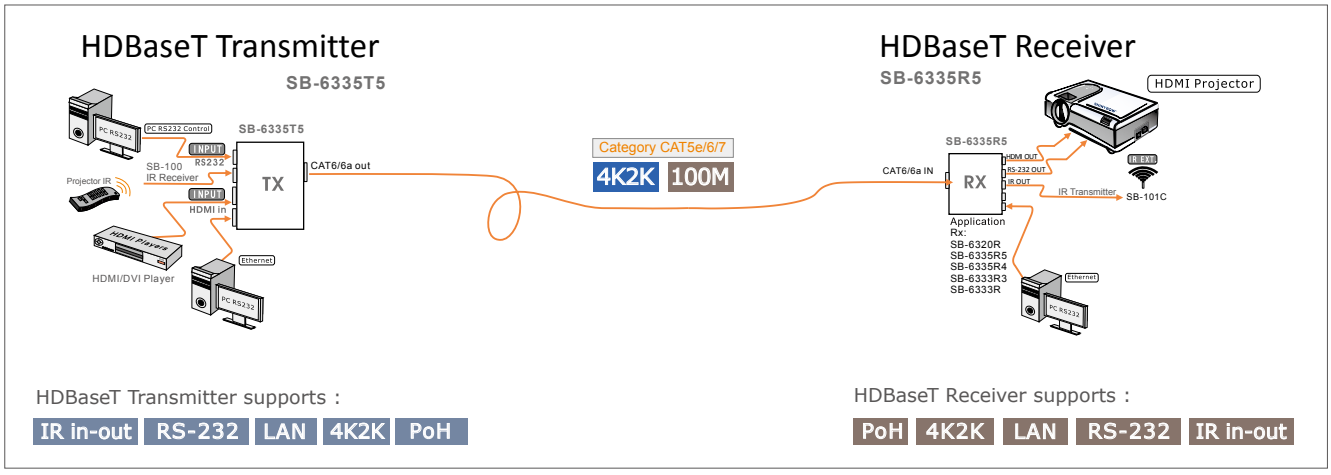

HDBaseT Transmitter supports :

IR in-out | RS-232 | LAN | 4K2K | PoH

HDBaseT Receiver supports :

PoH | 4K2K | LAN | RS-232 | IR in-out

© 2015 Copyrighted All Rights Reserved.

SB-6335T5/SB-6351R

HDMI HDBaseT Extender with (PoH)

HDMI HDBaseT 4K2K CAPABLE PoH Power Over HDBaseT

LAN | RS-232 | IR in | IR out | 100M

SB-6335T5
HDMI HDBaseT Transmitter (PoH)

Ear Rack :
#WM-1INCH-130MM

Input : 1x HDMI
Output : 1x HDBaseT (PoH)
Controls : IR (in/out), RS-232, LAN

SB-6351R
HDMI HDBaseT Receiver (PoH)

Input : 1x HDBaseT (PoH)
Output : 1x HDMI
Controls : IR (in/out), RS-232, LAN
PoH : Power 48VDC Supports from Transmitter (SB-6335T5)

04

FEATURES

01. HDBaseT TX/RX with 3D, 4Kx2K over a single UTP/STP cable up to 330ft (100M)
02. Support HDMI 1080p@60 video V1.4a 3D and Ultra HD 4K2K video, CEC / HDCP compliant
03. Support link speeds of up to Video, TMDS format Max. 8.1 Gbit/s, Signal 340MHz
04. Deep Color, Full HD 1080p@60Hz@24/36/48bit/pixels
05. Support 1080p TV's at 24/30/60/100/120 Hz and above as well as Blu-rays at 24 FPS
06. Support Digital Audio 7.1 LPCM 192KHz, 24bits, Full HD Dolby TrueHD and DTS-HD Master Audio uncompressed HD audio formats
07. Support PoH power over HDBaseT (Support Power 48VDC From Transmitter To Receiver)
08. Transfer Bi-directional Infrared control signal together with the HDMI signal
09. RS-232 port for firmware update or RS-232 control signal transmission
10. Support HDMI CEC between your connected Source and display gear
11. With LED indicators to show the POWER / PoH / HDCP / LINK status
12. HDBaseT transfer HDMI, PoE, LAN, RS-232 and Bi-Directional IR over single Category cable
13. Support Super Audio CD (DSD), CEC commands protocol table
14. Mounting Ears and wall mount pack supplied
15. Power supply using universal power switch 48VDC, 50/60Hz,100~240VAC

SPECIFICATIONS

Type of Extender	HDBaseT RX & TX use HDMI signal over category UTP/STP Cable
Input Signals	HDMI with Digital Video(TMDS)/Audio 0.5~1.0vPP, DDC 5Vpp
HDBaseT Signal Supports	HDMI 1.4a HDMI format Standard, DVI and HDCP Compliant
Video Support	HDMI and DVI TMDS format for 1920x1200 resolution up to 8.1 Gbps (340MHz), Digital RGB 48bits/px, deep color, 3D
Category Cable Support	CAT5e, CAT6, CAT6a, CAT7 UTP/STP cable
Support HDMI resolutions	480p, 720p 1080i/1080p and Ultra HD 4K2K
Scan Rate Accepted	Support HDMI full HD Resolution; Frequency 24Hz to 120Hz
Controls	1x IR in, 1x IR out, 1x RS-232 I/O and 1x LAN series interface
PoH Support	PoH power over HDBaseT (Support Power 48VDC From Transmitter To Receiver). (SB-6351R)
Transfer distance	Up to 330ft (100 meters)
HDMI I/O connectors	HDMI Type A - SMD 19pin Female Type
HDBaseT I/O connectors	HDBaseT RJ-45, 8p8c Female socket
Safety Approvals	CE, FCC, VCCI, REACH
Dimension (WxDxH)	5.31" x 5.11" x 1" (135mm x 130mm x 26mm)
Weight	0.4775 kg / 1.05 lb
Power consumption	Max. 1250mA (Full load 1080p-60Hz signal with use DC12V input)
Power Supply	Power Input +48VDC, 5A (Universal Type 50/60Hz, 100~240 VAC)

DIAGRAM TYPICAL

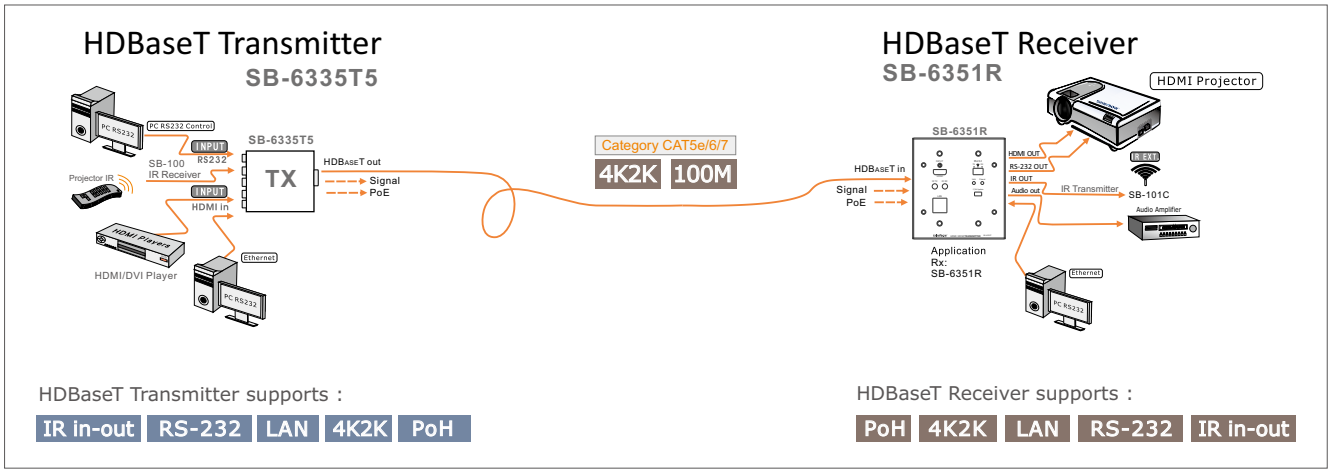

© 2015 Copyrighted All Rights Reserved.

SB-6353T/SB-6353R

HDMI HDBaseT Extender with (PoH)

HDMI HDBT 4K2K CAPABLE PoH Power Over HDBaseT

LAN | RS-232 | IR in | IR out | 100M

SB-6353T
HDMI HDBaseT Transmitter (PoH)

Input : 1x HDMI
Output : 1x HDBaseT (PoH)
Controls : IR (in/out), RS-232, LAN

SB-6353R
HDMI HDBaseT Receiver (PoH)

Ear Rack :
#WM-1INCH-130MM

Input : 1x HDBaseT (PoH) in (Signals and PoH support from Transmitter)
Output : 1x HDMI
Controls : IR (in/out), RS-232, LAN
PoH : Supports 48VDC

04

FEATURES

01. HDBaseT TX/RX with 3D, 4Kx2K over a single UTP/STP cable up to 330ft (100M)
02. Support HDMI 1080p@60 video V1.4a 3D and Ultra HD 4K2K video, CEC / HDCP compliant
03. Support link speeds of up to Video, TMDS format Max. 8.1 Gbit/s, Signal 340MHz
04. Deep Color, Full HD 1080p@60Hz@24/36/48bit/pixels
05. Support 1080p TV's at 24/30/60/100/120 Hz and above as well as Blu-rays at 24 FPS
06. Support Digital Audio 7.1 LPCM 192KHz, 24bits, Full HD Dolby TrueHD and DTS-HD Master Audio uncompressed HD audio formats
07. Support PoH power over HDBaseT (Power support 48VDC To Transmitter)
08. Transfer Bi-directional Infrared control signal together with the HDMI signal
09. RS-232 port for firmware update or RS-232 control signal transmission
10. Support HDMI CEC between your connected Source and display gear
11. With LED indicators to show the POWER/LINK status
12. HDBaseT transfer HDMI, PoE, LAN, RS-232 and Bi-Directional IR over single Category cable
13. Support Super Audio CD (DSD), CEC commands protocol table
14. Mounting Ears and wall mount pack supplied
15. Power supply using universal power switch 50/60Hz,100~240VAC

SPECIFICATIONS

Type of Extender	HDBaseT RX & TX use HDMI signal over category UTP/STP Cable
Input Signals	HDMI with Digital Video(TMDS)/Audio 0.5~1.0vPP, DDC 5Vpp
HDBaseT Signal Supports	HDMI 1.4a HDMI format Standard, DVI and HDCP Compliant
Video Support	HDMI and DVI TMDS format for 1920x1200 resolution up to 8.1 Gbps (340MHz), Digital RGB 48bits/px, deep color, 3D
Category Cable Support	CAT5e, CAT6, CAT6a, CAT7 UTP/STP cable
Support HDMI resolutions	480p, 720p 1080i/1080p and Ultra HD 4K2K
Scan Rate Accepted	Support HDMI full HD Resolution; Frequency 24Hz to 120Hz
Controls	1x IR in, 1x IR out, 1x RS-232 I/O and 1x LAN series interface
PoH Support	HDBaseT Receiver support 48VDC power To Transmitter (SB-6353T).
Transfer distance	Up to 330ft (100 meters)
HDMI I/O connectors	HDMI Type A - SMD 19pin Female Type
HDBaseT I/O connectors	HDBaseT RJ-45, 8p8c Female socket.
Safety Approvals	CE, FCC, VCCI , REACH
Dimension (WxDxH)	5.31" x 5.11" x 1" (135mm x 130mm x 26mm)
Weight	0.4775 kg / 1.05 lb
Power consumption	Max. 850mA (Full load 1080p-60Hz signal with use DC12V input)
Power Supply	Power Input +48VDC, 5A (Universal Type 50/60Hz, 100~240 VAC)

DIAGRAM TYPICAL

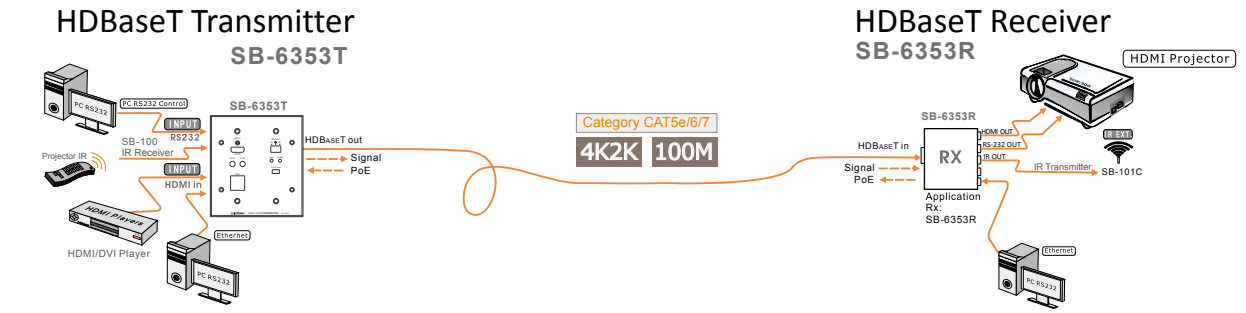

HDBaseT Transmitter supports :
IR in-out | RS-232 | LAN | 4K2K | PoH

HDBaseT Receiver supports :
PoH | 4K2K | LAN | RS-232 | IR in-out

© 2015 Copyrighted All Rights Reserved.

SB-6355T/SB-6355R

HDMI HDBaseT Extender

AUDIO | RS-232 | IR in | IR out | 100M

SB-6355T
HDMI HDBaseT Transmitter

Input : 1x HDMI, 1x Stereo Audio (AR/AL), 1x S/PDIF
Output : 1x HDBaseT (PoH), 1x S/PDIF
Controls : IR (in/out), RS-232, 2x LAN, 3x USB

SB-6355R
HDMI HDBaseT Receiver

Input : 1x HDBaseT (PoH), 1x S/PDIF
Output : 1x HDMI, 1x Stereo Audio (AR/AL), 1x S/PDIF
Controls : IR (in/out), RS-232, 2x LAN, 3x USB

Ear Rack :
#WM-1INCH-130MM

FEATURES

01. HDBaseT Extend HDMI with 3D and 4Kx2K over a single UTP/STP cable up to 330ft (100M)
02. Support HDMI 1080p@60 video V1.4a 3D and Ultra HD 4K2K video, CEC / HDCP compliant
03. Support link speeds of up to Video, TMDS format Max. 10.2 Gbit/s, Signal 340MHz
04. Deep Color, Full HD 1080p@60Hz@24/36/48bit/pixels
05. Support 1080p TV's at 24/30/60/100/120 Hz and above as well as Blu-rays at 24 FPS
06. Support Digital Audio 7.1 LPCM 192KHz, 24bits, Full HD Dolby TrueHD and DTS-HD Master Audio uncompressed HD audio formats
07. Transfer Bi-directional Infrared control signal together with the HDMI signal
08. Support HDMI CEC between your connected Source and display gear
09. With LED indicators to show the POWER/POE/LINK/HDCP status
10. Compatible with HDMI 2.0 and HDCP 2.2
11. 4-Play Transmits HDMI, IR, Ethernet, RS-232 and Bi-Directional
12. Support USB 2.0 control
13. Support external Bi-Directional S/PDIF in/out and available for multichannel audio
14. Support stereo audio with PCM 2CH
15. Support Super Audio CD (DSD), CEC commands protocol table
16. Mounting Ears and wall mount pack supplied
17. Power supply using universal power switch 50/60Hz,100~240VAC

SPECIFICATIONS

Type of Extender	HDBaseT Transmitter for HDMI signal over category UTP/STP Cable
Input Signals	HDMI with Digital Video(TMDS)/Audio 0.5~1.0vPP, DDC 5Vpp
HDMI Supports	HDMI 1.4 and HDMI 2.0
HDCP Supports	HDCP 1.X, 2.2 compliant
Video Support	HDMI and DVI TMDS format for 1920x1200 resolution up to 4K2K 30Hz 24bpp,4K2K 60Hz 24bpp with 4:2:0 pixel format, 10.2 Gbps (340MHz), Digital RGB 48bits/px, deep color, 3D
HDMI Audio I/O Supports	Multi Audio Formats 5.1 / 7.1, MAT(MLP), Dolby Digital, Dolby TrueHD, Dolby Digital Plus, DTS, D TS-ES 6.1, DTS-HD, DTS-HD-HRA, DTS-HD Master, (PCM-2CH)
S/PDIF Audio	External Bi-Directional S/PDIF in/out
S/PDIDF Audio Support	Dolby Digital, DTS, Dolby TrueHD, DTS HD-Master Audio, Dolby Pro Logic Iiz 7.1 & 9.1, and more
Category Cable Support	CAT5e, CAT6, CAT6a, CAT7 UTP/STP cable
Support HDMI resolutions	480p, 720p 1080i/1080p and Ultra HD 4K2K
Scan Rate Accepted	Support HDMI full HD Resolution; Frequency 24Hz to 120Hz
Controls	1x IR in, 1x IR out, 1x RS-232 I/O and 2x LAN series interface, USB
Transfer distance	Up to 330ft (100 meters)
HDMI I/O connectors	HDMI Type A - SMD 19pin Female Type
HDBaseT I/O connectors	HDBaseT RJ-45, 8p8c Female socket
Safety Approvals	CE, FCC, VCCI & REACH
Dimension (WxDxH)	8.27" x 4.45" x 1.06" (210mm x 113mm x 27mm)
Weight	0.7 kg /1.54 lb
Power consumption	Max. 850mA (Full load 1080p-60Hz signal with use DC12V input)
Power Supply	Power Input+12VDC, 2A (Universal Type 50/60Hz, 100~240 VAC)

DIAGRAM TYPICAL

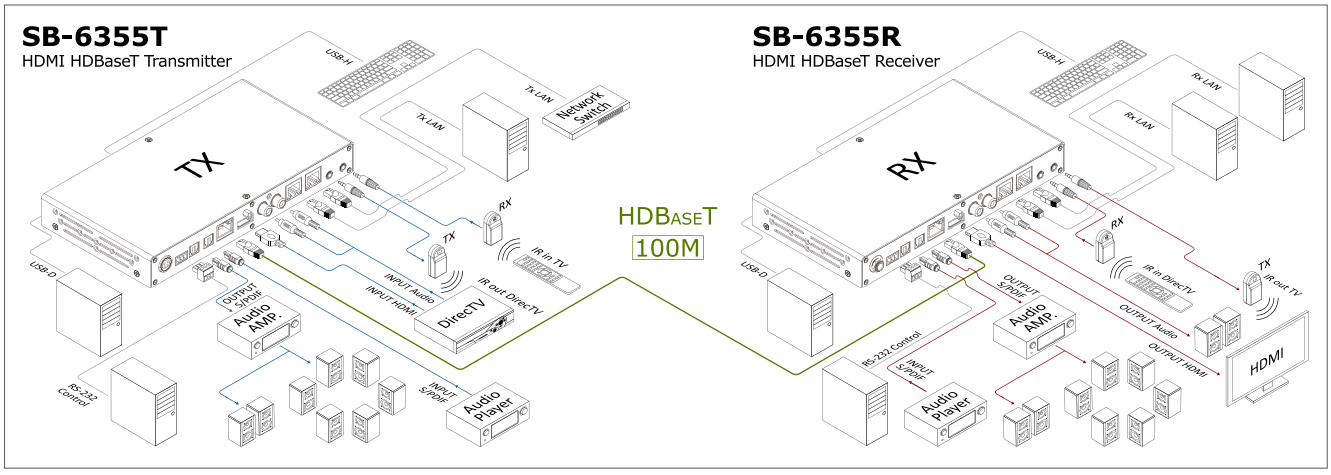

© 2015 Copyrighted All Rights Reserved.

SB-6320T/SB-6320R

HDMI HDBaseT Extender with Audio

AUDIO | RS-232 | IR in | IR out | 100M

SB-6320T
HDMI HDBaseT Transmitter with Audio

Input : 1x HDMI, 1x DVI-D Audio
Output : 1x HDBaseT
Controls : RS-232, IR (in/out), 2x LAN

SB-6320R
HDMI HDBaseT Receiver with Audio

Input : 1x HDBaseT
Output : 1x HDMI, 1x DVI-D Audio
Controls : RS-232, IR (in/out), 2x LAN

Ear Rack :
#WM-1INCH-130MM

FEATURES

01. HDBaseT Extend HDMI with 3D and 4Kx2K over a single UTP/STP cable up to 330ft (100M)
02. Support HDMI 1080p@60 video V1.4a 3D and Ultra HD 4K2K video, CEC / HDCP compliant
03. Support link speeds of up to Video, TMDS format Max. 8.1 Gbit/s, Signal 340MHz
04. Deep Color, Full HD 1080p@60Hz@24/36/48bit/pixels
05. Support 1080p TV's at 24/30/60/100/120 Hz and above as well as Blu-rays at 24 FPS
06. Support Digital Audio 7.1 LPCM 192KHz, 24bits, Full HD Dolby TrueHD and DTS-HD Master Audio uncompressed HD audio formats
07. Transfer Bi-directional Infrared control signal together with the HDMI signal
08. Support DVI Auxiliary Audio (stereo audio) input and S/PDIF (PCM) output
09. RS-232 port for firmware update or RS-232 control signal transmission
10. Support HDMI CEC between your connected Source and display gear
11. With LED indicators to show the POWER/HDCP/LINK status
12. Transmits HDMI, Audio, Ethernet, RS-232 and Bi-Directional IR over single LAN cable
13. Support Super Audio CD (DSD), CEC commands protocol table
14. Mounting Ears and wall mount pack supplied
15. Power supply using universal power switch 50/60Hz,100~240VAC

SPECIFICATIONS

Type of Extender	HDBaseT Transmitter for HDMI signal over category UTP/STP Cable
Input Signals	HDMI with Digital Video(TMDS)/Audio 0.5~1.0vPP, DDC 5Vpp
HDBaseT Signal Supports	HDMI 1.4a HDMI format Standard, DVI and HDCP Compliant
Video Support	HDMI and DVI TMDS format for 1920x1200 resolution up to 8.1 Gbps (340MHz), Digital RGB 48bits/px, deep color, 3D
HDMI Audio I/O Supports	Multi Audio Formats 5.1 / 7.1, MAT(MLP), Dolby Digital, Dolby TrueHD, Dolby Digital Plus, DTS, DTS-ES 6.1, DTS-HD, DTS-HD-HRA, DTS-HD Master, (PCM-2CH)
Extra DVI Audio input	HDBaseT Transmitter Input signal: Stereo Audio (3.5mm OD Jack)
S/PDIF Audio output	HDBaseT Receiver Output signal: S/PDIF(PCM-2CH, RCA connector)
Category Cable Support	CAT5e, CAT6, CAT6a, CAT7 UTP/STP cable
Support HDMI resolutions	480p, 720p 1080i/1080p and Ultra HD 4K2K
Scan Rate Accepted	Support HDMI full HD Resolution; Frequency 24Hz to 120Hz
Controls	1x IR in, 1x IR out, 1x RS-232 I/O and 2x LAN series interface
Transfer distance	Up to 330ft (100 meters)
HDMI I/O connectors	HDMI Type A - SMD 19pin Female Type
HDBaseT I/O connectors	HDBaseT RJ-45, 8p8c Female socket
Safety Approvals	CE, FCC, VCCI, REACH
Dimension (WxDxH)	5.31" x 5.11" x 1" (135mm x 130mm x 26mm)
Weight	0.4775 kg / 1.05 lb
Power consumption	Max. 750mA (Full load 1080p-60Hz signal with use DC12V input)
Power Supply	Power Input +12VDC, 2A (Universal Type 50/60Hz, 100~240 VAC)

DIAGRAM TYPICAL

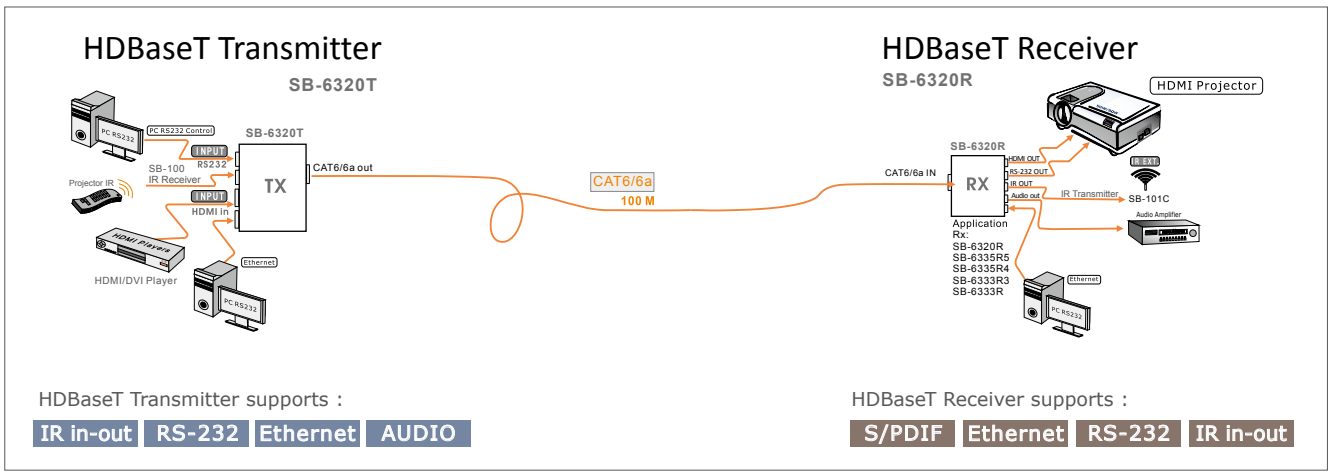

© 2015 Copyrighted All Rights Reserved.

SB-6335T4/SB-6335R4

HDMI HDBaseT Extender

LAN | RS-232 | IR in | IR out | 100M

SB-6335T4
HDMI HDBaseT Transmitter

Input : 1x HDMI
Output : 1x HDBaseT
Controls : IR (in/out), RS-232, LAN

SB-6335R4
HDMI HDBaseT Receiver

Input : 1x HDBaseT
Output : 1x HDMI
Controls : IR (in/out), RS-232, LAN

Ear Rack :
#WM-1INCH-130MM

04

FEATURES

01. HDBaseT Extend HDMI with 3D and 4Kx2K over a single UTP/STP cable up to 330ft (100M)
02. Support HDMI 1080p@60 video V1.4a 3D and Ultra HD 4K2K video, CEC / HDCP compliant
03. Support link speeds of up to Video, TMDS format Max. 8.1 Gbit/s, Signal 340MHz
04. Deep Color, Full HD 1080p@60Hz@24/36/48bit/pixels
05. Support 1080p TV's at 24/30/60/100/120 Hz and above as well as Blu-rays at 24 FPS
06. Support Digital Audio 7.1 LPCM 192KHz, 24bits, Full HD Dolby TrueHD and DTS-HD Master Audio uncompressed HD audio formats
07. Transfer Bi-directional Infrared control signal together with the HDMI signal
08. RS-232 port for firmware update or RS-232 control signal transmission
09. Support HDMI CEC between your connected Source and display gear
10. With LED indicators to show the POWER/HDCP/LINK status
11. Transmits HDMI video & audio, Ethernet, RS-232 and Bi-Directional IR
12. Support Super Audio CD (DSD), CEC commands protocol table
13. Mounting Ears and wall mount pack supplied
14. Power supply using universal power switch 50/60Hz,100~240VAC

SPECIFICATIONS

Type of Extender	HDBaseT Transmitter for HDMI signal over category UTP/STP Cable
Input Signals	HDMI with Digital Video(TMDS)/Audio 0.5~1.0vPP, DDC 5Vpp
HDBaseT Signal Supports	HDMI 1.4a HDMI format Standard, DVI and HDCP Compliant
Video Support	HDMI and DVI TMDS format for 1920x1200 resolution up to 8.1 Gbps (340MHz), Digital RGB 48bits/px, deep color, 3D
HDMI Audio I/O Supports	Multi Audio Formats 5.1 / 7.1, MAT(MLP), Dolby Digital, Dolby TrueHD, Dolby Digital Plus, DTS, DTS-ES 6.1, DTS-HD, DTS-HD-HRA, DTS-HD Master, (PCM-2CH)
Category Cable Support	CAT5e, CAT6, CAT6a, CAT7 UTP/STP category Lan cable
Support HDMI resolutions	480p, 720p 1080i/1080p and Ultra HD 4K2K
Scan Rate Accepted	Support HDMI full HD Resolution; Frequency 24Hz to 120Hz
Controls	1x IR in, 1x IR out, 1x RS-232 I/O and 2x LAN series interface
PoE Support	(optional)
Transfer distance	Up to 330ft (100 meters)
HDMI I/O connectors	HDMI Type A - SMD 19pin Female Type
HDBaseT I/O connectors	HDBaseT RJ-45, 8p8c Female socket
Safety Approvals	CE, FCC, VCCI & REACH
Dimension (WxDxH)	5.31" x 5.11" x 1" (135mm x 130mm x 26mm)
Weight	0.4175 kg / 0.9185 lb
Power consumption	Max. 850mA (Full load 1080p-60Hz signal with use DC12V input)
Power Supply	Power Input +12VDC, 2A (Universal Type 50/60Hz, 100~240 VAC)

DIAGRAM TYPICAL

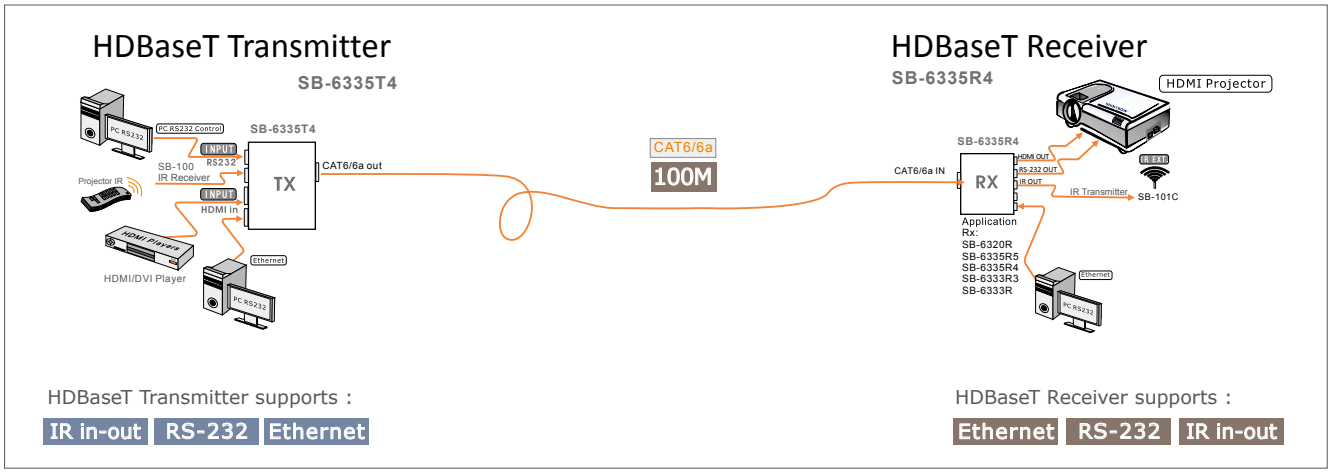

© 2015 Copyrighted All Rights Reserved.

SB-6335T/SB-6335R

HDMI HDBaseT Extender

RS-232 | IR in | IR out | 100M

SB-6335T
HDMI HDBaseT Transmitter

Input : 1x HDMI
Output : 1x HDBaseT
Controls : IR (in/out), RS-232

SB-6335R
HDMI HDBaseT Receiver

Input : 1x HDBaseT
Output : 1x HDMI
Controls : IR (in/out), RS-232

Ear Rack :
#WM-1INCH-130MM

FEATURES

01. HDBaseT Extend HDMI with 3D and 4Kx2K over a single UTP/STP cable up to 330ft (100M)
02. Support HDMI 1080p@60 video V1.4a 3D and Ultra HD 4K2K video, CEC / HDCP compliant
03. Support link speeds of up to Video, TMDS format Max. 8.1 Gbit/s, Signal 340MHz
04. Deep Color, Full HD 1080p@60Hz@24/36/48bit/pixels
05. Support 1080p TV's at 24/30/60/100/120 Hz and above as well as Blu-rays at 24 FPS
06. Support Digital Audio 7.1 LPCM 192KHz, 24bits, Full HD Dolby TrueHD and DTS-HD Master Audio uncompressed HD audio formats
07. Transfer Bi-directional Infrared control signal together with the HDMI signal
08. RS-232 port for firmware update or RS-232 control signal transmission
09. Support HDMI CEC between your connected Source and display gear
10. With LED indicators to show the POWER/HDMI/HDCP/LINK status
11. Transmits HDMI video & audio, RS-232 and Bi-Directional IR
12. Support Super Audio CD (DSD), CEC commands protocol table
13. Mounting Ears and wall mount pack supplied
14. Power supply using universal power switch 50/60Hz,100~240VAC

SPECIFICATIONS

Type of Extender	HDBaseT Transmitter for HDMI signal over category UTP/STP Cable
Input Signals	HDMI with Digital Video(TMDS)/Audio 0.5~1.0vPP, DDC 5Vpp
HDBaseT Signal Supports	HDMI 1.4a HDMI format Standard, DVI and HDCP Compliant
Video Support	HDMI and DVI TMDS format for 1920x1200 resolution up to 8.1 Gbps (340MHz), Digital RGB 48bits/px, deep color, 3D
HDMI Audio I/O Supports	Multi Audio Formats 5.1 / 7.1, MAT(MLP), Dolby Digital, Dolby TrueHD, Dolby Digital Plus, DTS, DTS-ES 6.1, DTS-HD, DTS-HD-HRA, DTS-HD Master, (PCM-2CH)
Category Cable Support	CAT5e, CAT6, CAT6a, CAT7 UTP/STP category Lan cable
Support HDMI resolutions	480p, 720p 1080i/1080p and Ultra HD 4K2K
Scan Rate Accepted	Support HDMI full HD Resolution; Frequency 24Hz to 120Hz
Controls	1x IR in, 1x IR out and 1x Rs232 I/O
Transfer distance	Up to 330ft (100 meters)
HDMI I/O connectors	HDMI Type A - SMD 19pin Female Type
HDBaseT I/O connectors	HDBaseT RJ-45, 8p8c Female socket
Safety Approvals	CE, FCC
Dimension (WxDxH)	5.31" x 5.11" x 1" (135mm x 130mm x 26mm)
Weight	0.4175 kg / 0.9185 lb
Power consumption	Max. 850mA (Full load 1080p-60Hz signal with use DC12V input)
Power Supply	Power Input +12VDC, 1.25A (Universal Type 50/60Hz, 100~240 VAC)

DIAGRAM TYPICAL

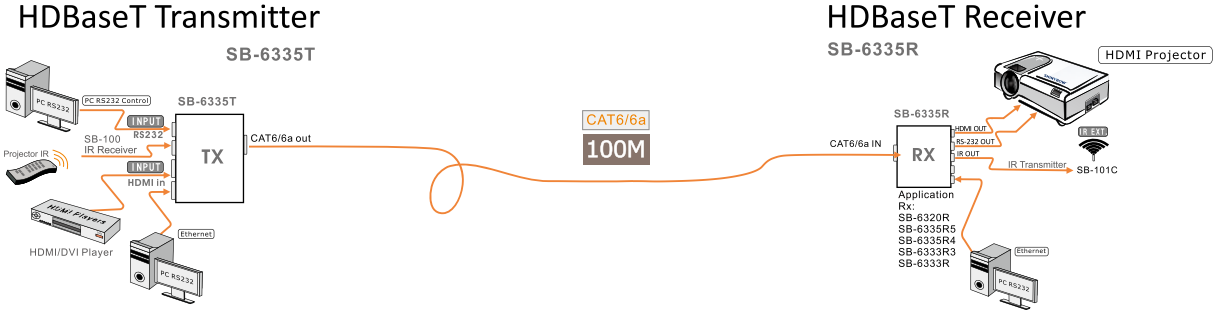

HDBaseT Transmitter supports :
IR in-out | RS-232

HDBaseT Receiver supports :
RS-232 | IR in-out

© 2015 Copyrighted All Rights Reserved.

SB-6333T3/SB-6333R3

HDMI HDBaseT Extender

RS-232 | IR in | IR out | 100M

SB-6333T3
HDMI HDBaseT Transmitter (100M)

Input : 1x HDMI
Output : 1x HDBaseT
Controls : RS-232, IR (in/out)

SB-6333R3
HDMI HDBaseT Receiver (100M)

Input : 1x HDBaseT
Output : 1x HDMI
Controls : RS-232, IR (in/out)

Ear Rack :
#WM-1INCH-130MM

04

FEATURES

01. HDBaseT Extend HDMI with 3D and 4Kx2K over a single UTP/STP cable up to 330ft (100M)
02. Support HDMI 1080p@60 video V1.4a 3D and Ultra HD 4K2K video, CEC / HDCP compliant
03. Support link speeds of up to Video, TMDS format Max. 8.1 Gbit/s, Signal 340MHz
04. Deep Color, Full HD 1080p@60Hz@24/36/48bit/pixels
05. Support 1080p TV's at 24/30/60/100/120 Hz and above as well as Blu-rays at 24 FPS
06. Support Digital Audio 7.1 LPCM 192KHz, 24bits, Full HD Dolby TrueHD and DTS-HD Master Audio uncompressed HD audio formats
07. Transfer Bi-directional Infrared control signal together with the HDMI signal
08. RS-232 port for firmware update or RS-232 control signal transmission
09. Support HDMI CEC between your connected Source and display gear
10. With LED indicators to show the POWER/LINK status
11. Transmits HDMI video & audio, RS-232 and Bi-Directional IR
12. Support Super Audio CD (DSD), CEC commands protocol table
13. Mounting Ears and wall mount pack supplied
14. Power supply using universal power switch 50/60Hz,100~240VAC

SPECIFICATIONS

Type of Extender	HDBaseT Transmitter for HDMI signal over category UTP/STP Cable
Input Signals	HDMI with Digital Video(TMDS)/Audio 0.5~1.0vPP, DDC 5Vpp
HDBaseT Signal Supports	HDMI 1.4a HDMI format Standard, DVI and HDCP Compliant
Video Support	HDMI and DVI TMDS format for 1920x1200 resolution up to 8.1 Gbps (340MHz), Digital RGB 48bits/px, deep color, 3D
HDMI Audio I/O Supports	Multi Audio Formats 5.1 / 7.1, MAT(MLP), Dolby Digital, Dolby TrueHD, Dolby Digital Plus, DTS, DTS-ES 6.1, DTS-HD, DTS-HD-HRA, DTS-HD Master, (PCM-2CH)
Category Cable Support	CAT5e, CAT6, CAT6a, CAT7 UTP/STP category Lan cable
Support HDMI resolutions	480p, 720p 1080i/1080p and Ultra HD 4K2K
Scan Rate Accepted	Support HDMI full HD Resolution; Frequency 24Hz to 120Hz
Controls	1x IR in, 1x IR out and 1x RS-232 I/O
Transfer distance	Up to 330ft (100 meters)
HDMI I/O connectors	HDMI Type A - SMD 19pin Female Type
HDBaseT I/O connectors	HDBaseT RJ-45, 8p8c Female socket
Safety Approvals	CE, FCC, VCCI , REACH
Dimension (WxDxH)	3.54" x 2.36" x 1" (90mm x 60mm x 26mm)
Weight	0.25 kg / 0.55 lb
Power consumption	Max. 850mA (Full load 1080p-60Hz signal with use DC12V input)
Power Supply	Power Input +12VDC, 2A (Universal Type 50/60Hz, 100~240 VAC)

DIAGRAM TYPICAL

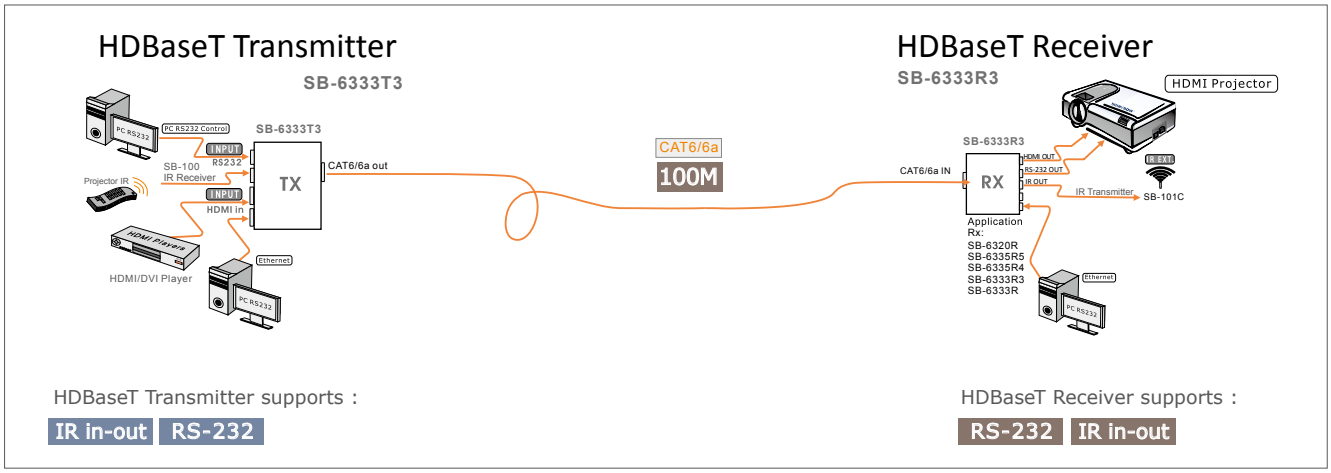

HDBaseT Transmitter supports :
IR in-out | RS-232

HDBaseT Receiver supports :
RS-232 | IR in-out

© 2015 Copyrighted All Rights Reserved.

SB-6333T/SB-6333R

HDMI HDBaseT Extender

RS-232 | IR in | IR out | 70M

SB-6333T
HDMI HDBaseT Transmitter (70M)

Input : 1x HDMI
Output : 1x HDBaseT
Controls : RS-232, IR (in/out)

SB-6333R
HDMI HDBaseT Receiver (70M)

Input : 1x HDBaseT
Output : 1x HDMI
Controls : RS-232, IR (in/out)

Ear Rack :
#WM-1INCH-130MM

FEATURES

01. HDBaseT Extend HDMI with 3D and 4Kx2K over a single UTP/STP cable up to 230ft (70M)
02. Support HDMI 1080p@60 video V1.4a 3D and Ultra HD 4K2K video, CEC / HDCP compliant
03. Support link speeds of up to Video, TMDS format Max. 8.1 Gbit/s, Signal 340MHz
04. Deep Color, Full HD 1080p@60Hz@24/36/48bit/pixels
05. Support 1080p TV's at 24/30/60/100/120 Hz and above as well as Blu-rays at 24 FPS
06. Support Digital Audio 7.1 LPCM 192KHz, 24bits, Full HD Dolby TrueHD and DTS-HD Master Audio uncompressed HD audio formats
07. Transfer Bi-directional Infrared control signal together with the HDMI signal
08. RS-232 port for firmware update or RS-232 control signal transmission
09. Support HDMI CEC between your connected Source and display gear
10. With LED indicators to show the POWER/LINK status
11. Transmits HDMI video & audio, RS-232 and Bi-Directional IR
12. Support Super Audio CD (DSD), CEC commands protocol table
13. Mounting Ears and wall mount pack supplied
14. Power supply using universal power switch 50/60Hz,100~240VAC

SPECIFICATIONS

Type of Extender	HDBaseT Transmitter for HDMI signal over category UTP/STP Cable
Input Signals	HDMI with Digital Video(TMDS)/Audio 0.5~1.0vPP, DDC 5Vpp
HDBaseT Signal Supports	HDMI 1.4a HDMI format Standard, DVI and HDCP Compliant
Video Support	HDMI and DVI TMDS format for 1920x1200 resolution up to 8.1 Gbps (340MHz), Digital RGB 48bits/px, deep color, 3D
HDMI Audio I/O Supports	Multi Audio Formats 5.1 / 7.1, MAT(MLP), Dolby Digital, Dolby TrueHD, Dolby Digital Plus, DTS, DTS-ES 6.1, DTS-HD, DTS-HD-HRA, DTS-HD Master, (PCM-2CH)
Category Cable Support	CAT5e, CAT6, CAT6a, CAT7 UTP/STP category Lan cable
Support HDMI resolutions	480p, 720p 1080i/1080p and Ultra HD 4K2K
Scan Rate Accepted	Support HDMI full HD Resolution; Frequency 24Hz to 120Hz
Controls	1x IR in, 1x IR out and 1x RS-232 I/O
Transfer distance	Up to 230ft (70 meters)
HDMI I/O connectors	HDMI Type A - SMD 19pin Female Type
HDBaseT I/O connectors	HDBaseT RJ-45, 8p8c Female socket
Safety Approvals	CE, FCC, VCCI & REACH
Dimension (WxDxH)	3.54" x 2.36" x 1" (90mm x 60mm x 26mm)
Weight	0.25 kg / 0.55 lb
Power consumption	Max. 850mA (Full load 1080p-60Hz signal with use DC12V input)
Power Supply	Power Input +12VDC, 2A (Universal Type 50/60Hz, 100~240 VAC)

DIAGRAM TYPICAL

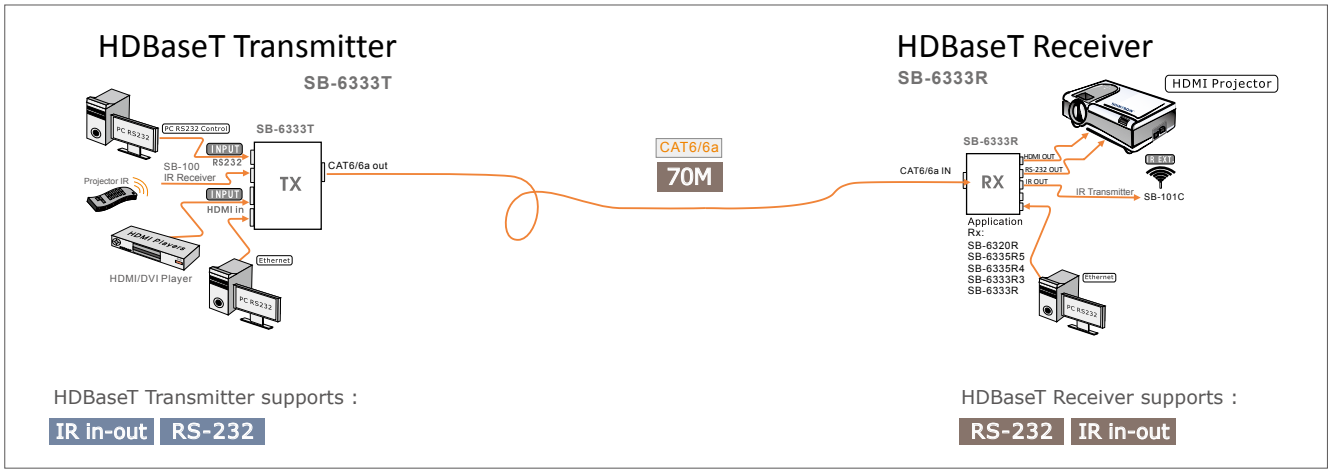

© 2015 Copyrighted All Rights Reserved.

SB-6334T5/SB-6334R5

DVI HDBaseT Extender (PoH)

HDBT™ 4K2K CAPABLE PoH Power Over HDBaseT

LAN | RS-232 | IR in | IR out | 100M

SB-6334T5
DVI HDBaseT Transmitter (PoH)

Input : 1x DVI
Output : 1x HDBaseT (PoH)
Controls : IR (in/out), RS-232, LAN

SB-6334R5
DVI HDBaseT Receiver (PoH)

Input : 1x HDBaseT (PoH)
Output : 1x DVI
Controls : IR (in/out), RS-232, LAN

Ear Rack :
#WM-1INCH-130MM

04

FEATURES

01. DVI-HDBaseT Extend with 3D and HDMI 4Kx2K over a single UTP/STP cable up to 330ft (100M)
02. Support DVI WUXGA 1920x1200@60 video and Ultra HD 4K2K video, HDCP 2.0 compliant
03. Support link speeds of up to Video Max. 8.16 Gbit/s, Signal 340MHz, TMDS format
04. Support HDMI Deep Color, Full HD 1080p@60Hz@24/36/48bit/pixels
05. Support 1080p TV's at 24/30/60/100/120 Hz and above as well as Blu-rays at 24 FPS
06. Support Digital Audio PCM-2CH Digital audio formats
07. HDBaseT Transfer Bi-directional Infrared control signal together with the HDMI signal
08. RS-232 port for firmware update or RS-232 control signal transmission
09. Support DVI CEC between your connected Source and display gear
10. With LED indicators to show the POWER/PoH/HDCP/LINK status
11. 5-Play Transmits DVI, Audio, PoE, Ethernet, RS-232 and Bi-Directional
12. Support Super Audio CD (DSD), CEC commands protocol table
13. Mounting Ears and wall mount pack supplied
14. Power supply using universal power switch 50/60Hz,100~240VAC

SPECIFICATIONS

Type of Extender	HDBaseT Transmitter for DVI signal over category UTP/STP Cable
Input Signals	DVI with Digital Video(TMDS)/Audio 0.5~1.0vPP, DDC 5Vpp
HDBaseT Signal Supports	For DVI format Standard, Video TMDS and HDCP Compliant
Video Support	HDMI and DVI TMDS format for 1920x1200 resolution up to 8.16 Gbps (340MHz), Digital RGB 48bits/px, deep color, 3D
HDMI Audio I/O Supports	PCM-2CH
Category Cable Support	CAT5e, CAT6, CAT6a, CAT7 UTP/STP cable
Support DVI resolutions	Up to WUXGA 1920x1200 @ 60Hz and Ultra HD 4K2K
Scan Rate Accepted	Support HDMI full HD Resolution; Frequency 24Hz to 120Hz
Controls	1x IR in, 1x IR out, 1x RS-232 I/O and 2x LAN series interface
PoE Support	HDBaseT Transmitter with 48VDC adaptor
Transfer distance	Up to 330ft (100 meters)
DVI I/O connectors	DVI-D - (24+5) pin Female DIP Type (without Audio)
HDBaseT I/O connectors	HDBaseT RJ-45, 8p8c Female socket
Safety Approvals	CE, FCC, VCCI & REACH
Dimension (WxDxH)	5.31" x 5.11" x 1" (135mm x 130mm x 26mm)
Weight	0.4235 kg / 0.9317 lb
Power consumption	Max. 9015mA (Full load 1920x1200-60Hz with use DC12V input)
Power Supply	Power Input +12VDC, 2A (Universal Type 50/60Hz, 100~240 VAC)

DIAGRAM TYPICAL

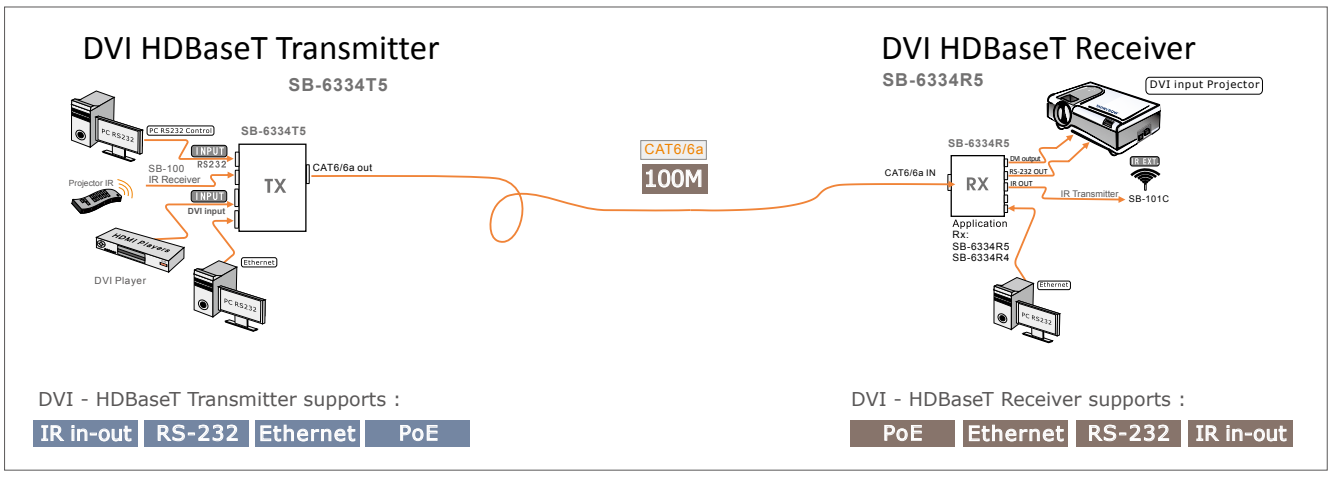

DVI - HDBaseT Transmitter supports :
IR in-out | RS-232 | Ethernet | PoE

DVI - HDBaseT Receiver supports :
PoE | Ethernet | RS-232 | IR in-out

© 2015 Copyrighted All Rights Reserved.

SB-6334T4/SB-6334R4

DVI HDBaseT Extender

LAN | RS-232 | IR in | IR out | 100M

SB-6334T4
DVI HDBaseT Transmitter

Input : 1x DVI
Output : 1x HDBaseT
Controls : IR (in/out), RS-232, LAN

SB-6334R4
DVI HDBaseT Receiver

Input : 1x HDBaseT
Output : 1x DVI
Controls : IR (in/out), RS-232, LAN

Ear Rack :
#WM-1INCH-130MM

FEATURES

01. DVI-HDBaseT Extend with 3D and HDMI 4Kx2K over a single UTP/STP cable up to 330ft (100M)
02. Support DVI WUXGA 1920x1200@60 video and Ultra HD 4K2K video, HDCP 2.0 compliant
03. Support link speeds of up to Video Max. 8.16 Gbit/s, Signal 340MHz, TMDS format
04. Support HDMI Deep Color, Full HD 1080p@60Hz@24/36/48bit/pixels
05. Support 1080p TV's at 24/30/60/100/120 Hz and above as well as Blu-rays at 24 FPS
06. Support Digital Audio PCM-2CH Digital audio formats
07. HDBaseT Transfer Bi-directional Infrared control signal together with the HDMI signal
08. RS-232 port for firmware update or RS-232 control signal transmission
09. Support DVI CEC between your connected Source and display gear
10. With LED indicators to show the POWER/HDCP/LINK status
11. 4-Play Transmits DVI, Ethernet, RS-232 and Bi-Directional
12. Support Super Audio CD (DSD), CEC commands protocol table
13. Mounting Ears and wall mount pack supplied
14. Power supply using universal power switch 50/60Hz,100~240VAC

SPECIFICATIONS

Type of Extender	HDBaseT Transmitter for DVI signal over category UTP/STP Cable
Input Signals	DVI with Digital Video(TMDS)/Audio 0.5~1.0vPP, DDC 5Vpp
HDBaseT Signal Supports	For DVI format Standard, Video TMDS and HDCP Compliant
Video Support	HDMI and DVI TMDS format for 1920x1200 resolution up to 8.16 Gbps (340MHz), Digital RGB 48bits/px, deep color, 3D
HDMI Audio I/O Supports	PCM-2CH
Category Cable Support	CAT5e, CAT6, CAT6a, CAT7 UTP/STP cable
Support DVI resolutions	WUXGA 1920x1200 @ 60Hz and Ultra HD 4K2K
Scan Rate Accepted	Support HDMI full HD Resolution; Frequency 24Hz to 120Hz
Controls	1x IR in, 1x IR out, 1x RS-232 I/O and 1x LAN series interface
PoE Support	(Optional)
Transfer distance	Up to 330ft (100 meters)
DVI I/O connectors	DVI-D - (24+5) pin Female DIP Type (without Audio)
HDBaseT I/O connectors	HDBaseT RJ-45, 8p8c Female socket
Safety Approvals	CE, FCC, VCCI & REACH
Dimension (WxDxH)	5.31" x 5.11" x 1" (135mm x 130mm x 26mm)
Weight	0.4125 kg / 0.9075 lb
Power consumption	Max. 8255mA (Full load 1920x1200-60Hz with use DC12V input)
Power Supply	Power Input +12VDC, 2A (Universal Type 50/60Hz, 100~240 VAC)

DIAGRAM TYPICAL

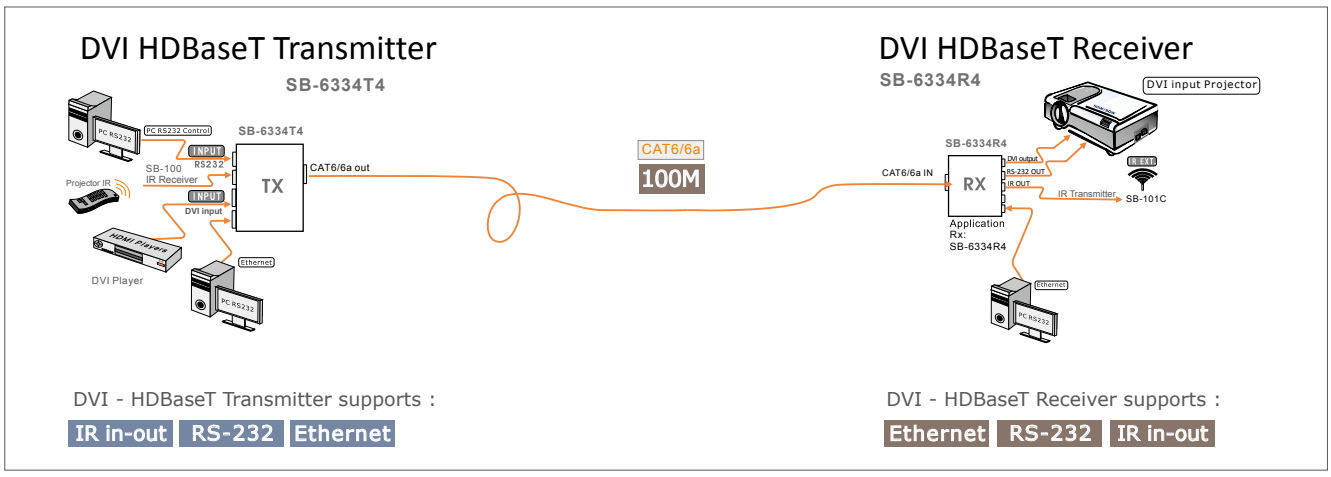

© 2015 Copyrighted All Rights Reserved.

SB-6501T/SB-6501R

HDMI To Fiber Optic Extender

Fiber IR 300M

SB-6501T
HDMI To Fiber Optic Transmitter

Input : 1x HDMI, 1x IR (Tx)
Output : 1x Fiber Optic

SB-6501R
HDMI To Fiber Optic Receiver

Input : 1x Fiber Optic
Output : 1x HDMI, 1x IR (Rx)

FEATURES

01. HDMI over Optical Fiber Extender
02. Extend HDMI up to 1000ft (300M)
03. Support video resolution up to 1920x1200
04. Available single-strand multimode LC fiber optic cable
05. Support EDID, HDCP and HDCP over DLI, no more EDID learning
06. Proven optical module reliability: TELCORDIA GR-468
07. Signal re-clocking, no TMDS extension to minimize skew
08. Secure data without RFI/EMI emission or loss of video quality
09. Complies with class 1M laser eye safety in compliance with FDA/CDRH and IEC 60825-1
10. Support IR signal to control source from Fiber receiver side

SPECIFICATIONS

Type of Extender	Fiber Transmitter for HDMI signal over Optical Fiber Cable
Input Signals	HDMI
Signal Support	HDMI 1.3a HDMI format Standard and HDCP Compliant
Video Support	1920 x 1200 / 1080P @ 60Hz, resolution allowed by HDCP V1.2 up to 165MHz pixel clock
Audio Support	Dolby TrueHD, Dolby Digital Plus, DTS, DTS-ES 6.1, DTS-HD, DTS-HD-HRA, DTS-HD Master, (PCM-2CH)
Dynamic EDID	Plug & Play, no need to learn
Fiber Connector	LC Receptacle
Controls	1x IR in, 1x IR out
Transfer distance	Multi Mode, up to 1000 ft
Operating Temperature	0°C to + 50°C
Storage Temperature	-20°C to + 85°C
Humidity	0 to 90% RH (non-condensing)
Safety Approvals	CE
Dimension (WxDxH)	2.14" x 1.63" x 0.63" (54.4mm x 41.5mm x 16mm)
Weight	0.1 kg / 0.22 lb
Operation Voltage	5 DVC
Power Supply	Power Input +5VDC, 0.85A (Universal Type 50/60Hz, 100~240 VAC)

DIAGRAM TYPICAL

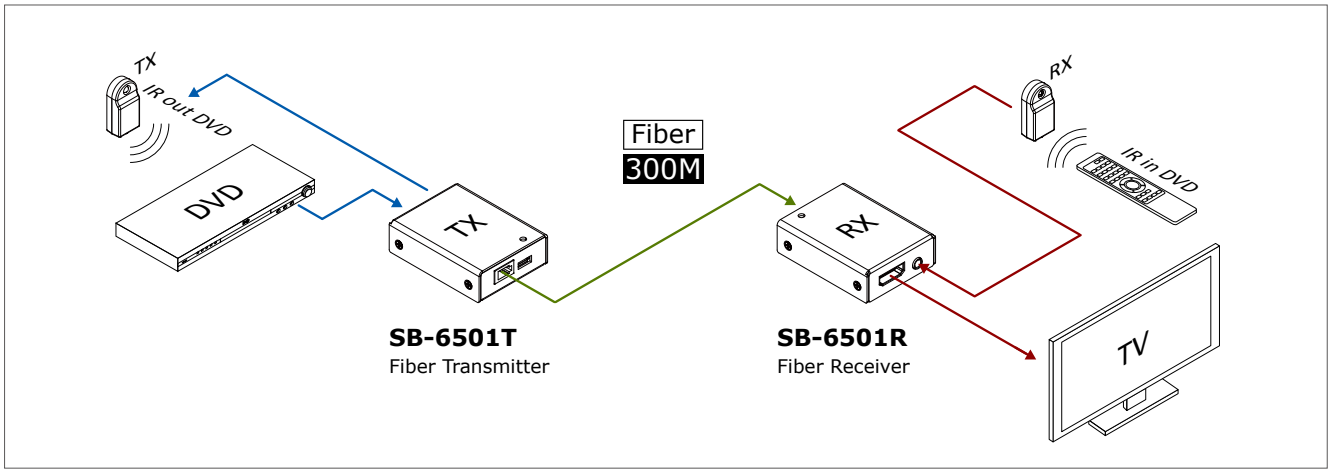

© 2015 Copyrighted All Rights Reserved.

SB-6502T/SB-6502R

DVI To Fiber Optic Extender

Fiber DVI 300M

SB-6502T
DVI To Fiber Optic Transmitter

Input : 1x DVI
Output : 1x Fiber Optic

SB-6502R
DVI To Fiber Optic Receiver

Input : 1x Fiber Optic
Output : 1x DVI

FEATURES

01. DVI over Optical Fiber Extender
02. Extend DVI up to 1000ft (300M)
03. Support video resolution up to 1920x1200
04. Available single-strand multimode LC fiber optic cable
05. Support EDID, HDCP and HDCP over DLI, no more EDID learning
06. Proven optical module reliability: TELCORDIA GR-468
07. Signal re-clocking, no TMDS extension to minimize skew
08. Secure data without RFI/EMI emission or loss of video quality
09. Complies with class 1M laser eye safety in compliance with FDA/CDRH and IEC 60825-1
10. Support DDWG standard for DVI compliant monitors

SPECIFICATIONS

Type of Extender	Fiber Transmitter for DVI signal over Optical Fiber Cable
Input Signals	DVI-D
Video Support	1920 x 1200 / 1080P @ 60Hz, resolution allowed by HDCP V1.2 up to 165MHz pixel clock
Dynamic EDID	Plug & Play, no need to learn
Fiber Connector	LC Receptacle
Transfer distance	Multi Mode, up to 1000 ft
Operating Temperature	0°C to + 50°C
Storage Temperature	-20°C to + 85°C
Humidity	0 to 90% RH (non-condensing)
Safety Approvals	CE
Dimension (WxDxH)	2.19" x 1.63" x 0.63" (55.6mm x 41.5mm x 16mm)
Weight	0.1 kg / 0.22 lb
Operation Voltage	+5VDC
Power Supply	Power Input +5VDC, 0.85A (Universal Type 50/60Hz, 100~240 VAC)

DIAGRAM TYPICAL

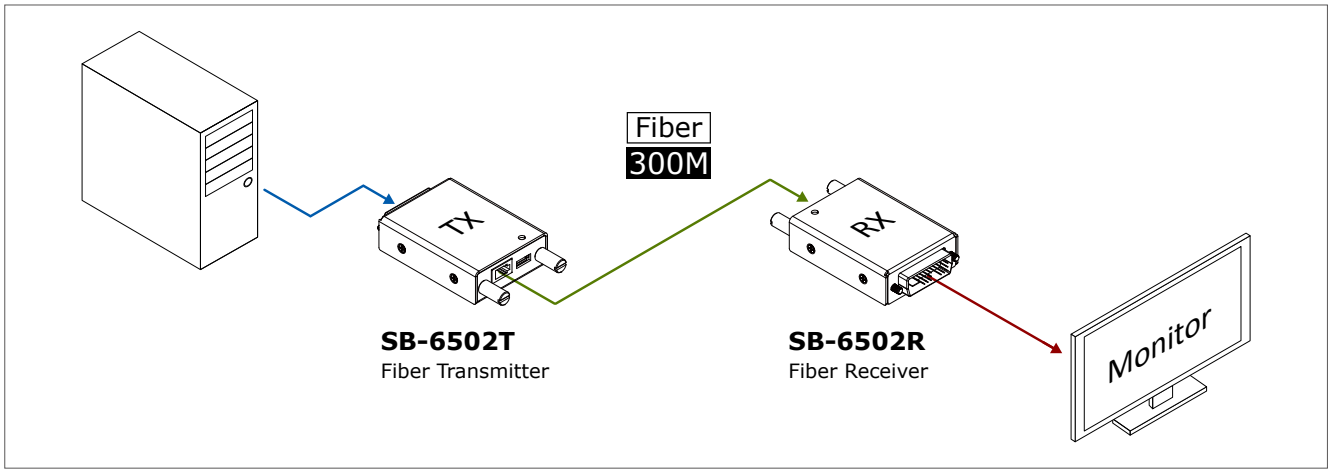

© 2015 Copyrighted All Rights Reserved.

SB-6531T/SB-6531R

HDMI To Fiber Optic Extender

Fiber IR 300M

SB-6531T
HDMI To Fiber Optic Transmitter

Input : 1x HDMI
Output : 1x Fiber Optic

SB-6531R
HDMI To Fiber Optic Receiver

Input : 1x Fiber Optic
Output : 1x HDMI

FEATURES

01. HDMI over Optical Fiber Extender
02. Extend HDMI up to 1000ft (300M)
03. Support link speed up to 10.2Gpbs
04. Support video resolution up to 4K2K
05. Available single-strand multimode LC fiber optic cable
06. Support EDID, HDCP and HDCP over DLI, no more EDID learning
07. Proven optical module reliability: TELCORDIA GR-468
08. Signal re-clocking, no TMDS extension to minimize skew
09. Secure data without RFI/EMI emission or loss of video quality
10. Complies with class 1M laser eye safety in compliance with FDA/CDRH and IEC 60825-1

SPECIFICATIONS

Type of Extender	Fiber Transmitter for HDMI signal over Optical Fiber Cable
Input Signals	HDMI
Signal Support	HDMI 1.4a HDMI format Standard and HDCP Compliant
Video Support	1920 x 1200 / 1080P @ 60Hz, up to 4K2K @ 30Hz
Audio Support	Dolby TrueHD, Dolby Digital Plus, DTS, DTS-ES 6.1, DTS-HD, DTS-HD-HRA, DTS-HD Master, (PCM-2CH)
Dynamic EDID	Plug & Play, no need to learn
Fiber Connector	Double LC Receptacle
Transfer distance	Multi Mode, up to 1000 ft
Operating Temperature	0°C to + 50°C
Storage Temperature	-20°C to + 85°C
Humidity	to 90% RH (non-condensing)
Safety Approvals	CE
Dimension (WxDxH)	3.15" x 0.79" x 0.35" (80mm x 20mm x 9mm)
Weight	0.1 kg / 0.22 lb
Operation Voltage	5 DVC
Power Supply	Power Input +5VDC, 0.85A (Universal Type 50/60Hz, 100~240 VAC)

DIAGRAM TYPICAL

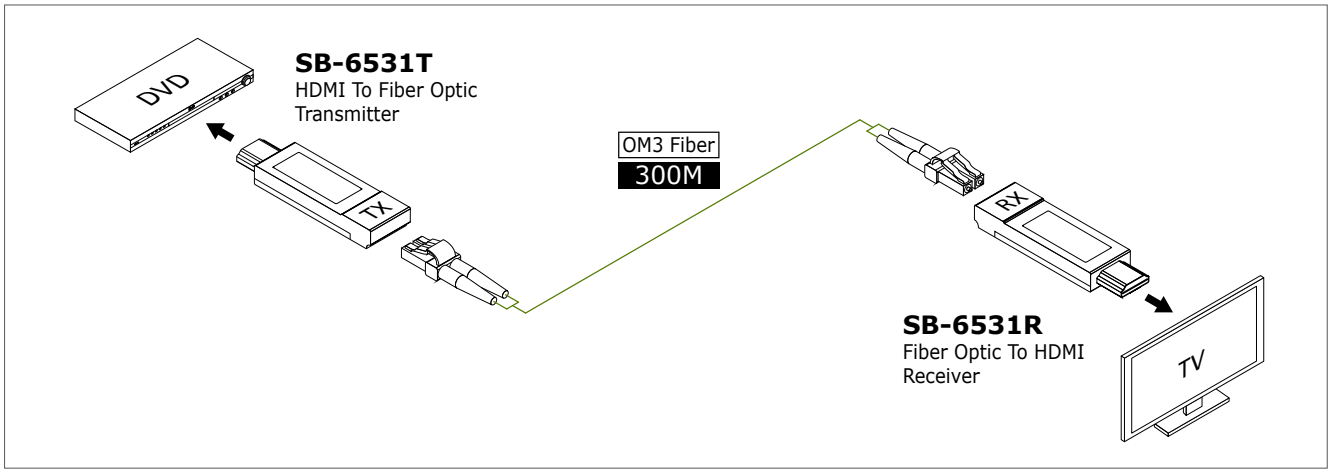

© 2015 Copyrighted All Rights Reserved.

SB-6532

Wireless RS-232 Extender

Wireless Controls : RS-232

RS-232 300M

FEATURES

01. Wireless RS-232 adaptor
02. Support point to point or point to multi-point connection
03. Easy and free programming
04. Wireless transmit distance up to 300m
05. Frequency bandwidth with 433MHz@FSK modulation
06. Support UART Interface(Half-duplex Transmission)
07. Support Two-wire (TXD / RXD) and Four-wire (TXD / RXD / CTS / RTS) switching
08. 64 Byte TX/RX data FIFO
09. Support text and File data RF Transmitter
10. Support Two way date RF Transmitter
11. Build-In hopping with Anti-interference
12. Direct I/O with Baud rate option
13. Support RS-232 RF repeater and extender
14. Support DTE / DCE switching

SPECIFICATIONS

Type of Extender	Wireless RS-232 Extender
UART Baud Rate Support	1,200 / 2,400 / 4,800 / 9,600/ 19,200 / 38,400 / 57,600 / 115.200 bps
UART Interface	Half-duplex Transmission
RF Transmitter Support	Text and file date
Hopping Frequency	433.3MHz, 433.6MHz, 434MHz, 3Channel
Receiver Sensitivity	-103 dBm @250K bps
Frequency bands	433 MHz@FSK modulation
Data Rate	100Kbps
Distance	300m
RS-232 Interface	TXD / RXD and CTS / RTS
TX power	up to 17 dBm @ 433.92MHz
Supply Voltage	2.5V ~ 3.3V
Low consumption	TX : 30mA, RX : 14mA @10dBm
Dimension (WxDxH)	3.6" x 1.65" x 0.78" (91.4mm x 42mm x 19.9mm)
Weight	47.5 g / 0.1 lb

DIAGRAM TYPICAL

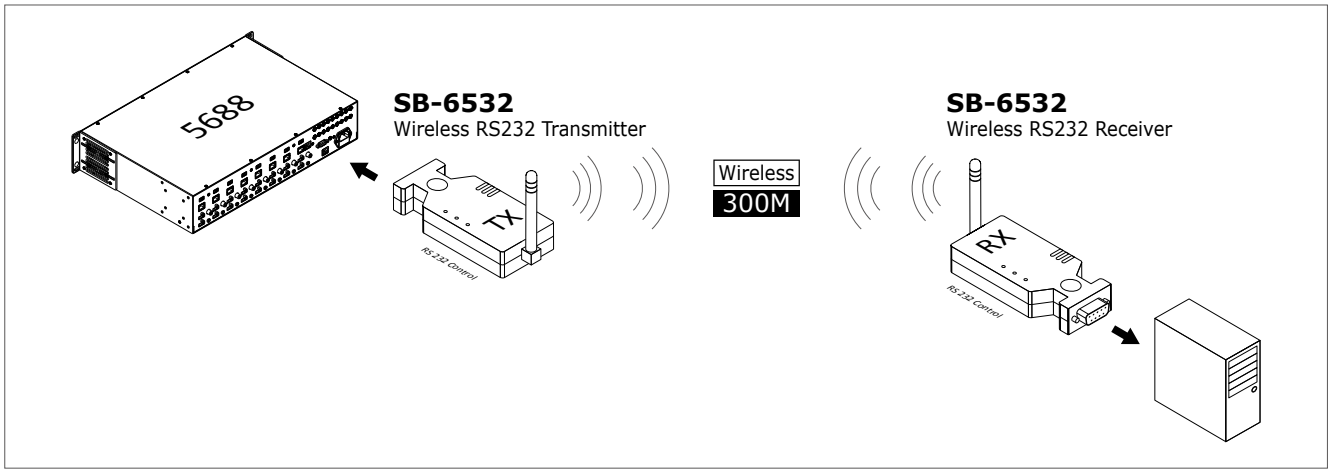

© 2015 Copyrighted All Rights Reserved.

SB-6225

HDMI EXTENDER

Input : 1x HDMI
Output : 1x HDMI

EXTENDER

INTRODUCTION

The SB-6225 is a HDMI™ extender and will extend the HDMI™ signals up to100 feet. In its basic configuration, the SB-6225 links two HDMI™ cables to create a longer extension up to 100 feet. SB-6225 repeaters can be daisy chained, to create much longer HDMI™ extensions up to 360 feet. The SB-6225 supports the HDMI™ 1.3, 1.4a 3D version ,1080p HD resolution and multi-channels digital audio for the best signal quality. Standard installation involves using HDMI™ cable -- up to 50 feet long which is connected from HDMI™ source (DVD player,PS3, set-topbox) to the HDMI™ input jack on the SB-6225. The another HDMI™ cable runs from the SB-6225 output jack to the HDTV display -- up to 50 feet away.

DIAGRAM TYPICAL

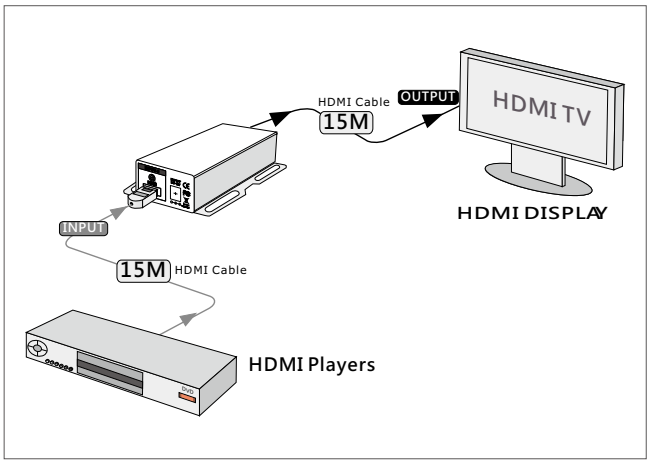

FEATURES

01. HDMI signal Digital Video TMDS /Audio 30M Extender
02. HDMI digital Video/Audio and DVI format and HDCP compliant
03. Support link speeds of up to 3.4 Gbps
04. Support Digital RGB 36bits HDMI TMDS format deep color
05. Extension with high quality video 1920x1200 for 1080p-60Hz
06. Support HD High Definition resolution 408p, 720p 1080i/1080p
07. Support High quality Digital Audio format with DTS-HD Master Audio, Dolby True-HD & Dolby
08. Long distance extend between Blu-Ray HDMI player and HDMI display
09. Easy to install without any adjustment
10. Wall mountable
11. Power DC 12V input with Low power consuming

SPECIFICATIONS

Type of Extender	HDMI signal for distance 30M Extender
Signal Support	Compliant with HDMI 1.4a and DVI 1.1 standards, HDCP Compliant
Support HD resolution	Capable of supporting the following digital video formats in Deep Color Mode at up to 36 bits (12 bits/color):DTV resolutions: 480i, 576i, 480p, 576p, 1080i to 1080p, PC resolutions: VGA, SVGA, XGA, SXGA to UXGA
Audio Support	DTS-HD Master Audio, Dolby True-HD & Dolby Digital Plus
Safety Approval	CE, FCC,VCCI,REACH,WEEE,Erp
Dimension (WxDxH)	2.65" x 2.76" x 1" (67.4mm x 70mm x 25mm)
Weight	0.15 kg / 0.33 lb
Power Supply	DC 12V /0.42A Max, Use Universal Switch Type 50/60Hz, 100~240VAC

© 2015 Copyrighted All Rights Reserved.

SB-6225K

HDMI 4K2K EXTENDER

Input : 1x HDMI
Output : 1x HDMI

EXTENDER

INTRODUCTION

The SB-6225K is a HDMI™ extender and will extend the HDMI™ signals up to 50m. SB-6225K repeaters can be daisy chained, to create much longer HDMI™ extensions up to 50m. The SB-6225K supports the HDMI™ 1.3, 1.4a 3D version ,1080p HD resolution up to 4K2K and multi-channels digital audio for the best signal quality. Support link speed up to 6.75Gpbs. Standard installation involves using HDMI™ cable -- up to 25m long which is connected from HDMI™ source (DVD player,PS3, set-topbox) to the HDMI™ input jack on the SB-6225K. The another HDMI™ cable runs from the SB-6225K output jack to the HDTV display -- up to 25m away.

DIAGRAM TYPICAL

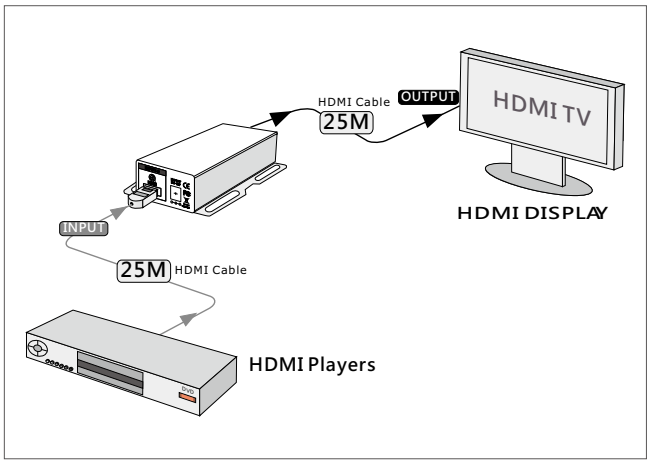

FEATURES

01. HDMI signal Digital Video TMDS /Audio 50M Extender
02. HDMI digital Video/Audio and DVI format and HDCP compliant
03. Support link speeds of up to 6.75 Gbps
04. Support Digital RGB 36bits HDMI TMDS format deep color
05. Support HD High Definition resolution 408p, 720p 1080i/1080p and 4K2K
06. Support EQ and De Emphasis Management
07. Support High quality Digital Audio format with DTS-HD Master Audio, Dolby True-HD & Dolby
08. Long distance extend between Blu-Ray HDMI player and HDMI display
09. Easy to install without any adjustment
10. Surface mounting bracket included
11. Power DC 12V input with Low power consuming

SPECIFICATIONS

Type of Extender	HDMI signal for distance 50M Extender
Signal Support	Compliant with HDMI 1.4 standards, HDCP Compliant
Support HD resolution	DTV resolutions : 480i, 576i, 480p, 576p, 1080i , 1080p and up to 4K2K PC resolutions : VGA, SVGA, XGA, SXGA to UXGA
Audio Support	DTS-HD Master Audio, Dolby True-HD & Dolby Digital Plus
Safety Approval	CE, FCC
Dimension (WxDxH)	2.65" x 2.76" x 1" (67.4mm x 70mm x 25mm)
Weight	0.15 kg / 0.33 lb
Power Supply	DC 12V /0.42A Max, Use Universal Switch Type 50/60Hz, 100~240VAC

© 2015 Copyrighted All Rights Reserved.

SB-5609

HDMI TO HDMI-S/PDIF-AUDIO EXTRACTOR

Input : 1x HDMI
Output : 1x HDMI, 1x S/PDIF, 1x Stereo Audio

HDMI | S/PDIF | AUDIO | EXTRACTOR

INTRODUCTION

SB-5609 is the high quality HDMI™ Audio Extractor. This Extractor supports HDMI™ Repeater and Equalizer between HDMI™ player and display. SB-5609 supports HDMI™ 1.3, 1.4a, DVI 1.0 compliant and HDCP 2.0 specification. Audio support PCM 2-channel IIS/DSD, S/PDIF and HDMI™ outputs, Video support 36 bits Deep Color up to 1080p-60 (225 MHZ).This device allows you to extract analogue audio LPCM2 and digital audio S/PDIF from the HDMI™ signal while still sending the original audio and video signal to your HD devices. When using a display without speakers you can still extract the analogue audio to external speakers or digital audio to an Amplifier.

DIAGRAM TYPICAL

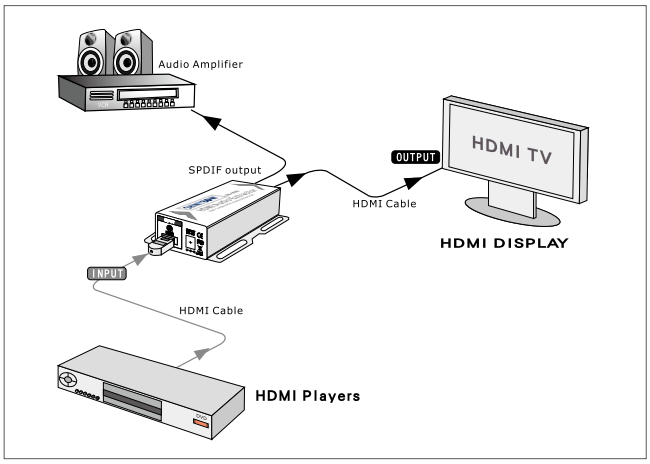

FEATURES

01. HDMI Digital Audio S/PDIF and Analogue Audio Extractor
02. HDMI 1.3, HDMI 1.4a 3D format, DVI 1.0 and HDCP compliant.
03. Support HDMI in/out Repeater with Equalizer.
04. Support 3D Video Format in HDMI 1.4
05. Support SD/HD Digital Audio 2-Channel IIS/DSD and S/PDIF Audio.
06. Support wide Frequency Range: 25MHz~225MHz TMDS colck.
07. Support 12bits HDMI Deep Color up to 1080p(225Mhz TMDS clock).
08. Support HD High Definition resolutions HDMI 408p, 720p 1080i/1080p
09. Support DVI resolutions up to UXGA (1920x1200).
10. Digital Audio S/PDIF format with DTS 5.1, Dolby 5.1 & PCM2
11. Support three EDID: TV-passing EDID to source, PCM-2CH and Bitstream
12. Cable support in/out distance 15M depend on the HDMI cable quality.
13. Mounting easy for Wall mountable
14. Power 12VDC input with Low power consumes

SPECIFICATIONS

Type of Extractor	HDMI digital Audio S/PDIF and Analogue Audio
HDMI Support	HDMI 1.3, HDMI 1.4a 3D format, DVI 1.0, DDC 5Vpp
HDCP	Compliant with HDCP 2.0 specification
EDID	TV-passing EDID to source, PCM-2CH and Bitstream
Video	1080p HDMI format and DVI 1920x1200 resolution Digital RGB 12bits format deep color TMDS clock
Audio Support	Audio port : PCM-2CH S/PDIF port : DTS 5.1, Dolby 5.1, PCM-2CH HDMI port : PCM-2CH, PCM 7.1, DTS 5.1, Dolby 5.1, Dolby Digital 7.1, DTS HD7.1, MAP(MLP) 7.1, One Bit Audio 2CH
3D Support	3D Video format for HDMI 1.4a (223MBHz)
Frequency Range	HDMI 25MHz ~ 225MHz TMDS clock
Cable distance	in/out 15M Totally 20~30M depend on HDMI cable quality
Safety Approval	CE, FCC
Dimension (WxDxH)	4.45" x 3.86" x 1.08" (113mm x 98mm x 27.5mm)
Weight	0.35 kgs / 0.77 lb
Power Supply	DC 12V / 0.42A MAX Use universal switch type 50/60Hz, 100~240VAC

© 2015 Copyrighted All Rights Reserved.

SB-5610

HDMI ARC CONTROL BOX

Input : 1x HDMI
Output : 1x HDMI, 1x S/PDIF, 1x Stereo Audio

HDMI | AUDIO | EXTRACTOR | ARC | S/PDIF

INTRODUCTION

SB-5610 is a high quality HDMI™ ARC Control Box with HDMI™ Audio Extractor. Audio are ARC, DVD Source, S/PDIF and Analog stereo. This control Box can link audio (ARC or Source S/PFID) to TV or Audio Amplifier and turn ON/OFF the TV or Audio Amplifier speaker. The Audio Extractor support HDMI™ Repeater and Equalizer between HDMI™ player and display. SB-5610 supports HDMI™ 1.3, HDCP 2.0 and DVI 1.0 compliant, HDMI™ 1.4a, 3D formats. Audio support PCM 2-channel IIS/DSD, S/PDIF and HDMI™ outputs, Video support 36 bits Deep Color up to 1080p-60Hz (225 MHZ). This device allows you to extract analogue audio LPCM2 and digital audio S/PDIF from the HDMI™ signal while still sending the original audio video signal to your HD devices. When using a display without speakers you can still extract the analogue audio to external speakers or digital audio to an Amplifier.

DIAGRAM TYPICAL

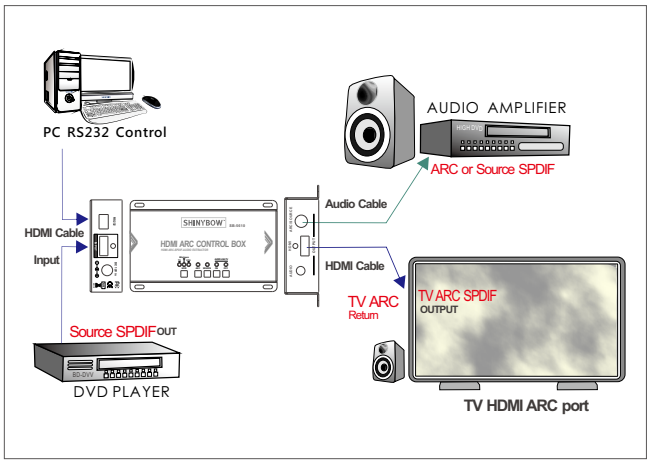

FEATURES

01. HDMI ARC Control Box with Source S/PDIF and Analogue Audio Extractor
02. HDMI 1.3, HDMI 1.4a 3D format, DVI 1.0 and HDCP compliant
03. Support HDMI in/out Repeater with Equalizer
04. Support HDMI 3D Video Format in HDMI 1.4
05. Support SD/HD Digital Audio 2-Channel IIS/DSD and S/PDIF Audio
06. Support wide Frequency Range: 25MHz~225MHz TMDS colck
07. Support 12bits HDMI Deep Color up to 1080p(225MHz TMDS clock)
08. Support HD High Definition resolutions HDMI 408p, 720p 1080i/1080p
09. Support DVI resolutions up to UXGA (1920x1200)
10. Digital Audio S/PDIF format with DTS 5.1, Dolby 5.1 & PCM2
11. Analog audio support : LPCM2
12. Support EDID : TV-passing EDID to source, PCM-2CH and Bitstream
13. Turn Audio of TV or Audio Amplifier Speakers ON or OFF
14. Support HDMI cable distance up to 50 feet (15M)
15. Wall mountable using the build-in tabs
16. Universal World Wide 100VAC~240VAC 50/60Hz power supply

SPECIFICATIONS

Type of Extractor	DMI Extractor ARC-Source S/PDIF-Analogue Audio
HDMI Compliant	HDMI 1.3, HDMI 1.4a 3D format, DVI 1.0
EDID Support	TV-passing EDID to source,PCM-2ch and Bitstream
Video Support	1080p HDMI format and DVI 1920x1200 resolution Digital RGB 12bits format deep color TMDS clock
Audio Support	PCM-2CH
S/PDIF port	DTS 5.1, Dolby 5.1, PCM-2CH
HDMI port	PCM-2CH, PCM 7.1, DTS 5.1, Dolby 5.1, Dolby Digital 7.1, DTS HD7.1, MAP(MLP) 7.1, one-Bit Audio 2CH
3D Support	3D Video format for HDMI 1.4a (225MHz)
Frequency Range	HDMI 25MHz ~ 225MHz TMDS clock
ARC Control	Audio Return Channel via TV HDMI ARC port
Audio Extractor	ON or OFF TV or Audio Amplifier
Cable distance	Total of 15M (depend on HDMI cable quality)
Safety Approval	CE, FCC
Dimension (WxDxH)	6.22" x 3.86" x 1.08" (158mm x 98mm x 27.5mm)
Weight	0.45 kgs / 1 lb
Power Supply	DC 12V /0.42A Max Use Universal Switch Type 50/60Hz, 100~240VAC

© 2015 Copyrighted All Rights Reserved.

SB-6110/SB-6110R

VGA-Audio Extender

VGA AUDIO CAT5

SB-6110
VGA-Audio Transmitter

Input : 1x VGA / Audio
Output : 1x CAT5

SB-6110R
VGA-Audio Receiver

Input : 1x CAT5
Output : 1x VGA / Audio

FEATURES

01. Support VGA-RGBHV & Stereo Audio(AR/AL) CAT-5 Transmitter and Receiver Extender.
02. SB-6110 : Input : 1x VGA+Audio
    Output : 1x CAT5
    SB-6110R : Input : 1x CAT5
    Output : 1x VGA+Audio
03. Support PC Resolution VGA(640x480) / SVGA(800x600) / XGA(1024x768) / SXGA(1280x1024) / UXGA(1600x1200), WUXGS(1900x1200)
04. Support HDTV Resolution 480p / 720p / 1080i / 1080p
05. Adjustment buttons of RGB. Brightness and TINT on SB-6110R
06. Extension distance is up to 100m(330ft) for SB-6110R and 300M (1000ft) for SB-6110R2
07. Wall mounted Ear Rack included

SPECIFICATIONS

Type of CAT5	Transmitter (TX) / Receiver (RX)
Type of Signal	VGA (RGBHV) & Stereo Audio (AR/AL) connectors
Video Bandwidth	Large signal Bandwidth : 225Mhz, -3dB Small Signal Bandwidth : 450Mhz, -3dB
Output balance error	-60dB @ 50Mhz
High Isolation between Amplifier	80dB @ 10Mhz
Audio-In Impedance	10 Ohms
Audio Frequency Response	20HZ to 20KHz, +/-1db
Safety Approvals	CE, FCC, VCCI
Dimension (WxDxH)	2.87" x 2.6" x 1.15" (73mm x 66mm x 29.1 mm)
Power Supply	DC 12V /1A Max Use Universal Switch Type 50/60Hz, 100~240VAC
Weight	0.17 kg / 0.37 lb

DIAGRAM TYPICAL

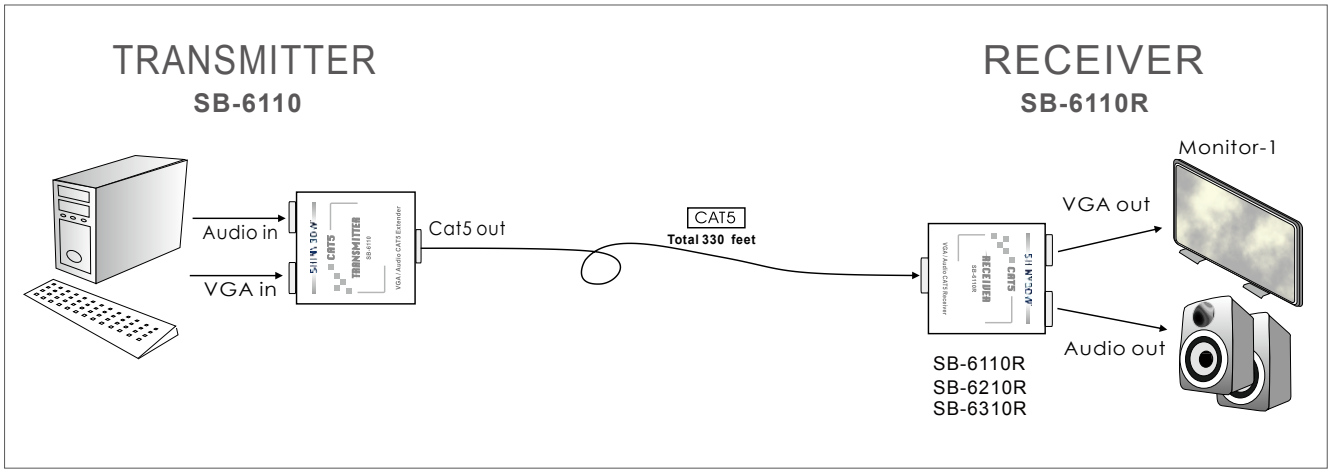

© 2015 Copyrighted All Rights Reserved.

SB-6210/SB-6210R

VGA-Audio Extender

VGA AUDIO CAT5

SB-6210
2Way VGA-Audio Transmitter

Input : 1x VGA / Audio
Output : 2x CAT5

SB-6210R
2Way VGA-Audio Receiver

Input : 1x CAT5 + 1 Loop Output Port
Output : 1x VGA / Audio

FEATURES

01. Support VGA-RGBHV & Stereo Audio(AR/AL), CAT5 Transmitter and Repeater + Receiver Extende
02. SB-6210 : Input : 1x VGA+ Audio
    Output : 2x CAT5
03. SB-6210R : Input : 1x CAT5 + 1 Loop Output Port
    Output : 1x VGA+ Audio
04. Support PC Resolution VGA(640x480) / SVGA(800x600) / XGA(1024x768) / SXGA(1280x1024) / UXGA(1600x1200)
05. Support HDTV Resolution 480p / 720p / 1080i / 1080p
06. Support one Loop Output port
07. Extension distance is up to 100m(330ft)
08. Wall mounted Ear Rack included

SPECIFICATIONS

Type of CAT5	Transmitter (TX) / Repeater + Receiver (RX)
Type of Signal	VGA (RGBHV) & Stereo Audio (AR/AL) connectors
Video Bandwidth	Large Signal Bandwidth : 225Mhz, -3dB Small Signal Bandwidth : 450Mhz, -3dB
Output Balance Error	-60dB @ 50Mhz
High Isolation between Amplifier	80dB @ 10Mh
Audio- in Impedance	10 Ohms
Audio Frequency Response	20HZ to 20KHz, +/-1db
Safety Approvals	CE, FCC, VCCI
Dimension (WxDxH)	3.07" x 2.87" x 1.15" (77. 9mm x 73mm x 29. 1mm)
Power Supply	DC 12V /1A Max Use Universal Switch Type 50/60Hz,100~240VAC
Weight	0.18 kg / 0.40 lb

DIAGRAM TYPICAL

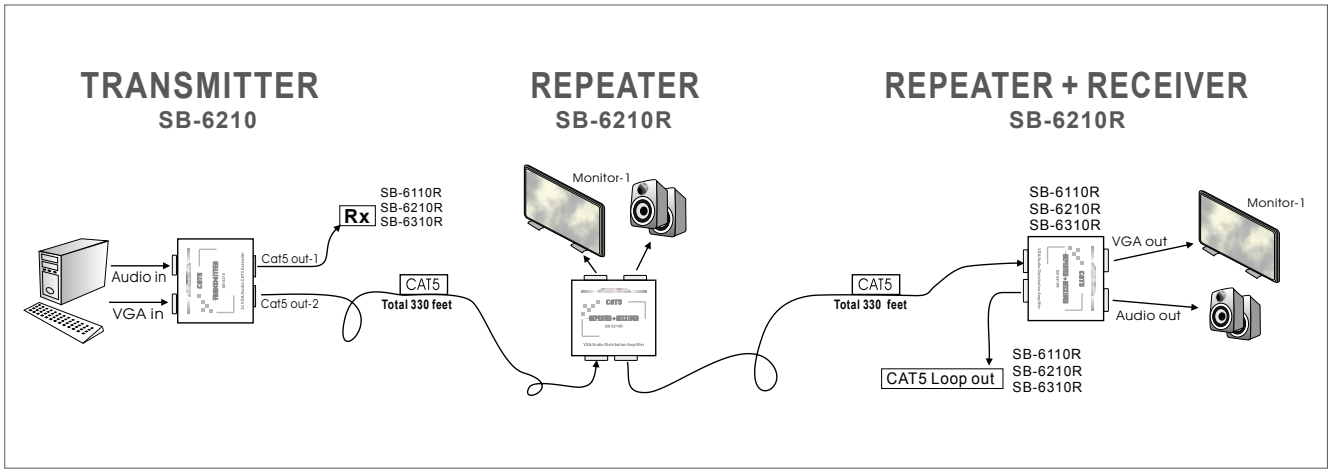

© 2015 Copyrighted All Rights Reserved.

SB-6310/SB-6310R

VGA-Audio Extender

VGA AUDIO CAT5

SB-6310
4Way VGA-Audio Transmitter

Input : 1x VGA / Audio + 1 Preview port
Output : 4x CAT5

SB-6310R
2Way VGA-Audio Receiver

Input : 1x CAT5 + 1 Loop Output Port
Output : 2x VGA / Audio

FEATURES

01. Support VGA-RGBHV & Stereo Audio(AR/AL) CAT-5 Transmitter and
02. Repeater + Receiver Extender
03. SB-6310: Input : 1x VGA / Audio + 1 Preview port
    Output : 4x CAT5
04. SB-6310R: Input : 1x CAT5 + 1 Loop Output Port
    Output : 2x VGA / Audio
05. Support PC Resolution: VGA(640x480) / SVGA(800x600) / XGA(1024x768) / SXGA(1280x1024) / UXGA(1600x1200)
06. Support HDTV Resolution: 480p / 720p / 1080i /1080p
07. Support one Loop Output port
08. Support adjustment of RGB signals TINT and BRIGHTNESS
09. Extension distance is up to 100m(330ft)
10. Wall mounted Ear Rack included

SPECIFICATIONS

Type of CAT5	Transmitter (TX) / Repeater + Receiver (RX)
Type of Signal	VGA (RGBHV) & Stereo Audio (AR/AL) connectors
Video Bandwidth	Large Signal Bandwidth : 225Mhz, -3dB Small Signal Bandwidth : 450Mhz, -3dB
Output Balance Error	-60dB @ 50Mhz
High Isolation between Amplifier	80dB @ 10Mhz
Audio- In Impedance	10 Ohms
Audio Frequency Response	20HZ to 20KHz, +/-1db
Safety Approvals	CE, FCC,VCCI
Dimension (WxDxH)	4.45" x 2.87" x 1.15" (112.9mm x 73mm x 29.1mm)
Power Supply	DC 12V /1A Max Use Universal Switch Type 50/60Hz, 100~240VAC
Weight	0.2 kg / 0.44 lb

DIAGRAM TYPICAL

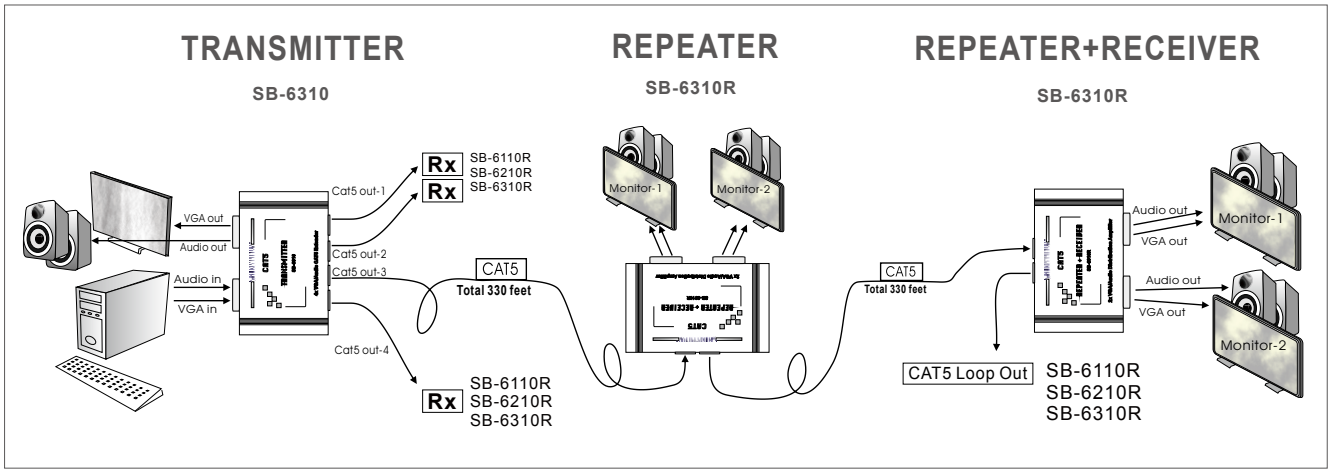

© 2015 Copyrighted All Rights Reserved.

SB-6135/SB-6135R

Composite Video · Digital · Audio Extender

COMPOSITE VIDEO DIGITAL AUDIO CAT5

SB-6135
Composite Video · Digital · Audio Transmitter

Input : 1x Composite Video or Digital Audio and Stereo Audio (AR/AL)
Output : 1x CAT5

SB-6135R
Composite Video · Digital · Audio Receiver

Input : 1x CAT5
Output : 1x Composite Video or Digital Audio and Stereo Audio (AR/AL)

FEATURES

01. Support Composite Video or Digital Audio(S/PDIF)/Stereo Audio over CAT5 Extension
02. SB-6135 : Input : 1x Composite Video or Digital Audio and Stereo Audio
    Output:1x CAT5
03. SB-6135R : Input : 1x CAT5
    Output : 1x Composite Video or Digital Audio and Stereo Audio
04. Support HDTV Resolution: 480p / 720p / 1080i / 1080p
05. Extending for long distance up to 100M (330ft)
06. Wall mounted Ear Rack included

SPECIFICATIONS

Type of CAT5	Transmitter (TX) / Repeater + Receiver (RX)
Type of Signal	Composite Video or Digital Audio (PCM) / Stereo Audio via 3x RCA connectors
Video Bandwidth	Large Signal Bandwidth : 225Mhz, -3dB Small Signal Bandwidth : 450Mhz, -3dB
Output Balance error	60dB @ 50Mhz
High Isolation between Amplifier	80dB @ 10Mhz
Audio- In Impedance	10 Ohms
Audio Frequency Response	20HZ to 20KHz, +/-1db
Safety Approvals	CE, FCC, VCCI
Dimension (WxDxH)	2.87" x 2.6" x1.15" (73mm x 66mm x 29.1mm)
Power Supply	DC12V / 1A Use Universal Switch Type 50/60Hz, 100~240VAC
Weight	0.17 kg / 0.37 lb

DIAGRAM TYPICAL

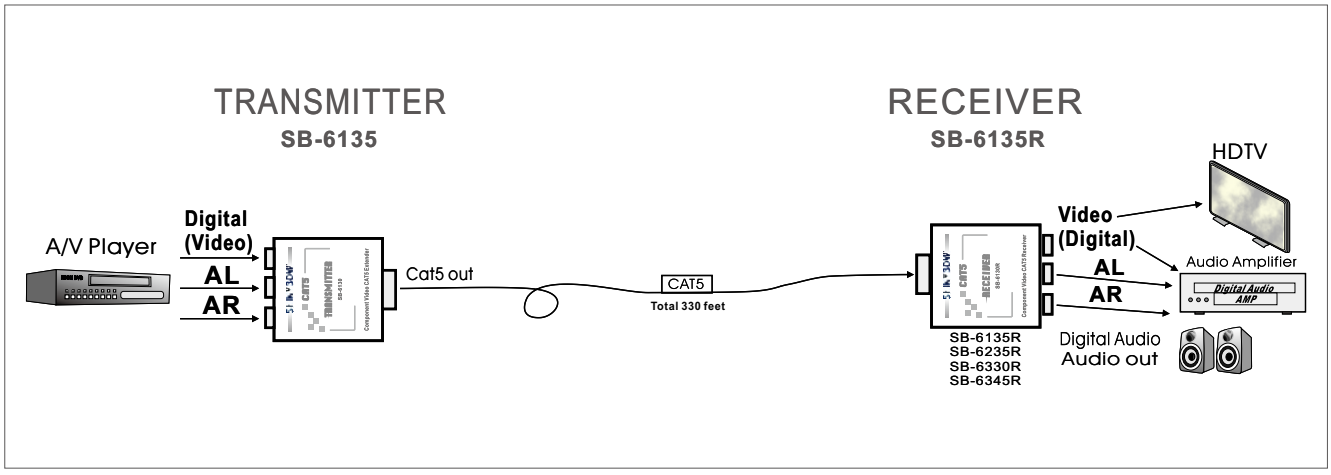

© 2015 Copyrighted All Rights Reserved.

SB-6235/SB-6235R

Composite Video · Digital · Audio Extender

COMPOSITE | VIDEO | DIGITAL | AUDIO | CAT5

SB-6235
2Way Composite Video · Digital · Audio Transmitter

Input : 1x Composite Video or Digital Audio and Stereo Audio (AR/AL)
Output : 2x CAT5

SB-6235R
2Way Composite Video · Digital · Audio Receiver

Input : 2x CAT5
Output : 1x Composite Video or Digital Audio and Stereo Audio (AR/AL)

FEATURES

01. Support Composite Video or Digital Audio (S/PDIF) / Stereo Audio over CAT-5 Transmitter and Repeater + Receiver Extender
02. SB-6235 : Input : 1x Composite Video or Digital Audio and Stereo Audio
    Output : 2x CAT5
03. SB-6235R : Input : 2x CAT5
    Output : 1x Composite Video or Digital Audio and Stereo Audio
04. Support HDTV Resolution 480p / 720p / 1080i / 1080p
05. Brightness and TINT frequency response adjustment control button on SB-6235R
06. Extension distance is up to 100m (330ft)
07. Wall mounted Ear Rack included

SPECIFICATIONS

Type of CAT5	Composite Video or Digital Audio(S/PDIF)/Stereo Audio over CAT-5 Transmitter, Repeater and Receiver Extender Transmitter(TX) / Repeater + Receiver(RX)
Type of Signal	ComIf it is so, then I think you can just change to 24 months posite Video or Digital Audio(S/PDIF)/Stereo Audio connectors
Video Bandwidth	225Mhz, -3dB large signal bandwidt 450Mhz, -3dB small signal bandwidth
Output Balance Error	-60dB @ 50Mhz
High Isolation	between Amplifier 80dB @ 10Mhz
Audio- in Impedance	10 Ohms
Audio Frequency Response	20HZ to 20KHz, +/-1db
Safety Approvals	CE, FCC, VCCI
Dimension (WxDxH)	3.07" x 2.87" x 1.15" (77.9mm x 73mm x 29.1mm)
Power Supply	DC 12V /1A MaxUse Universal Switch Type 50/60Hz, 100~240VAC
Weight	0.18 kg / 0.40 lb

DIAGRAM TYPICAL

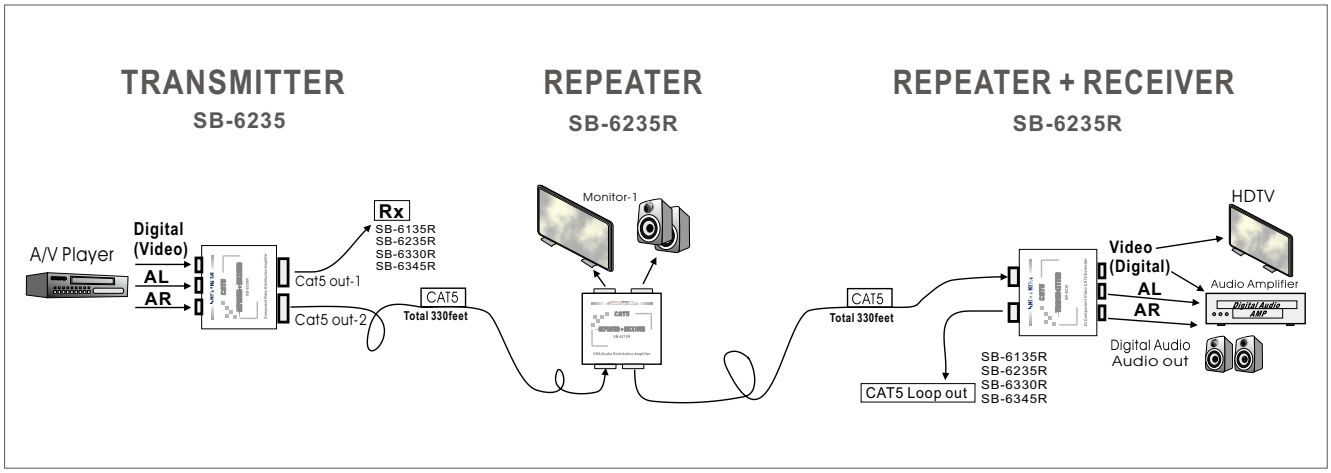

© 2015 Copyrighted All Rights Reserved.

SB-6345/SB-6345R

Composite Video · Digital · Audio Extender

COMPOSITE | VIDEO | DIGITAL | AUDIO | CAT5

SB-6345
4Way Composite Video · Digital · Audio Transmitter

Input : 1x Composite Video or Digital Audio and Stereo Audio (AR/AL) + 1 Preview port
Output : 4x CAT5

SB-6345R
2Way Composite Video · Digital · Audio Receiver

Input : 1x CAT5 + 1 Loop Output Port
Output : 2x Composite Video or Digital Audio and Stereo Audio (AR/AL)

FEATURES

01. Support Composite Video or Digital Audio (S/PDIF) / Stereo Audio over CAT-5 Transmitter and Repeater + Receiver Extender
02. SB-6235 : Input : 1x Composite Video or Digital Audio and Stereo Audio (AR/AL) + 1 Preview port
    Output : 4x CAT5
03. SB-6235R : Input : 1x CAT5 + 1 Loop Output Port
    Output : 2x Composite Video or Digital and Stereo Audio (AR/AL)
04. Support HDTV Resolution 480p / 720p / 1080i / 1080p
05. Brightness and TINT frequency response adjustment control button on SB-6235R
06. Extension distance is up to 100m (330ft)
07. Wall mounted Ear Rack included

SPECIFICATIONS

Type of CAT5	Composite Video or Digital Audio(S/PDIF)/Stereo Audio over CAT-5 Transmitter, Repeater and Receiver Extender. Transmitter(TX) / Repeater + Receiver(RX)
Type of Signal	Composite Video or Digital Audio(S/PDIF)/Stereo Audio connectors
Video Bandwidth	225Mhz, -3dB large signal bandwidt 450Mhz, -3dB small signal bandwidth
Output Balance Error	-60dB @ 50Mhz
High Isolation	between Amplifier 80dB @ 10Mhz
Audio- in Impedance	10 Ohms
Audio Frequency Response	20HZ to 20KHz, +/-1db
Safety Approvals	CE, FCC, VCCI
Dimension (WxDxH)	4.45" x 2.87" x1.15" (112.9mm x 73mm x 29.1mm)
Power Supply	DC 12V /1A Max Use Universal Switch Type 50/60Hz, 100~240VAC
Weight	0.2 kg / 0.44 lb

DIAGRAM TYPICAL

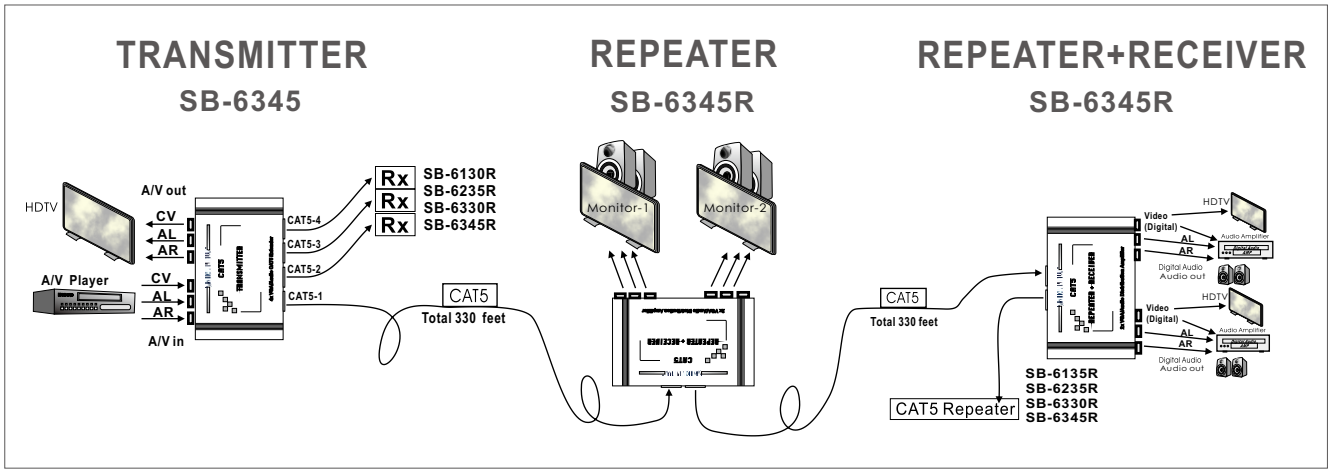

© 2015 Copyrighted All Rights Reserved.

SB-6130/SB-6130R

Component Video Extender

COMPONENT CAT5

SB-6130
Component Video Transmitter

Input : 1x Component Video
Output : 1x CAT5

SB-6130R
Component Video Receiver

Input : 1x CAT5
Output : 1x Component Video

FEATURES

01. Support Component Video(YPBPR) Over CAT5 Transmitter(Tx)/Receiver(Rx)
02. Provided by the category5 Cable via RJ-45 connector
03. SB-6130 : Input : 1x Component Video
    Output : 1x CAT5
04. SB-6130R : Input : 1x CAT5
    Output : 1x Component Video
05. Support Full HD resolutions 480i / 480p / 720p / 1080i and 1080p
06. RGB.TINT and BRIGHTNESS adjustment
07. Extension distance is up to 100M (330FT)
08. Wall mounted Ear Rack included

SPECIFICATIONS

Type of CAT5	Component Video Over CAT5 Transmitter(Tx)/ Receiver(Rx)
Type of Signals	Component Video (YPBPR) Via 3x RCA connectors
CAT5 connection	Provided by the category5 Cable via RJ-45 connectors
Video Bandwidth	225MHz(-3dB), 450MHz(-3dB) Large signal bandwidth
Output Balance Error	-60dB @ 50MHz
High isolation between Amplifier	80dB @ 10MHz
Audio impedance	10 Ohms
Audio Frequency response	20Hz to 20KHz, +/-1dB
Color proofread	TINT and BRIGHTNESS adjustment.
Enclosure	Ear-Wall mounting attached
HD resolutions	480i / 480p / 720p / 1080i and 1080p
CAT5 Extend distance	100M (330FT) Maximum
Safety Approvals	CE, FCC, VCCI
Dimension (WxDxH)	2.60" x 2.85" x 1.2" (70mm x 66mm x 29.1mm)
Power Supply	DC12V / 1A Max Use Universal Switch Type 50/60Hz, 100~240VAC
Weight	0.17 kg / 0.37 lb

DIAGRAM TYPICAL

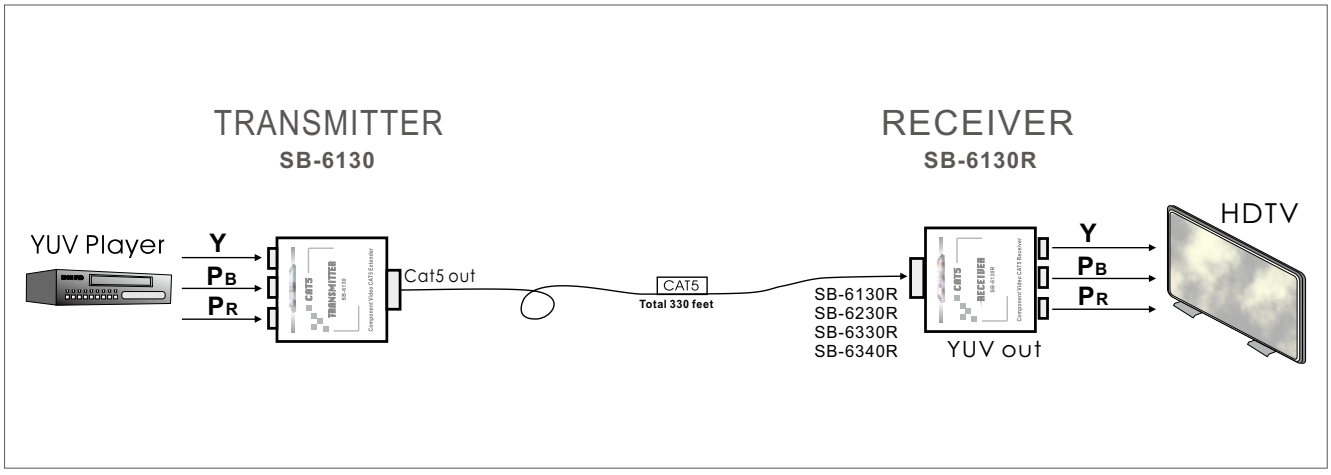

© 2015 Copyrighted All Rights Reserved.

SB-6230/SB-6230R

Component Video Extender

COMPONENT CAT5

SB-6230
2Way Component Video Transmitter

Input : 1x Component Video
Output : 2x CAT5

SB-6230R
2Way Component Video Receiver

Input : 1x CAT5 + 1 Loop Output Port
Output : 1x Component Video

FEATURES

01. Support Component Video (YPBPR) CAT5 Transmitter / Receiver / Repeater
02. Provided by the category5 Cable via RJ-45 connector
03. SB-6230 : Input : 1x Component Video
    Output : 2x CAT5
04. SB-6230R : Input : 1x CAT5 + 1 Loop Output Port
    Output : 1x Component Video
05. Support Full HD resolutions 480i / 480p / 720p / 1080i and 1080p
06. RGB.TINT and BRIGHTNESS adjustment.
07. Extension distance is up to 100M(330FT)
08. Wall mounted Ear Rack included

SPECIFICATIONS

Type of CAT5	CAT5 Transmitter(Tx)/Receiver(Rx)/Repeater(Rxx)
Type of Signals	Component Video (YPBPR) Via 3x RCA connectors
CAT5 connection	Provided by the category5 Cable via RJ-45 connectors CAT5 Repeater for Loop output to Another CAT5 Receiver
Video Bandwidth	225MHz(-3dB), 450MHz(-3dB) Large signal bandwidth
Output Balance Error	-60dB @ 50MHz
High isolation between Amplifier	80dB @ 10MHz
Color proofread	TINT and BRIGHTNESS adjustmen.
HD resolutions	480i / 480p / 720p / 1080i and 1080p
CAT5 Extend distance	100M (330FT) Maximum
Enclosure	wall mount ear includes
Safety Approvals	CE, FCC, VCCI
Dimension (WxDxH)	3.07" x 2.87" x 1.14" (78mm x 73mm x 29mm)
Weight	0.18 kg / 0.40 lb
Power Supply	DC12V / 1A Max Use Universal Switch Type 50/60Hz, 100~240VAC

DIAGRAM TYPICAL

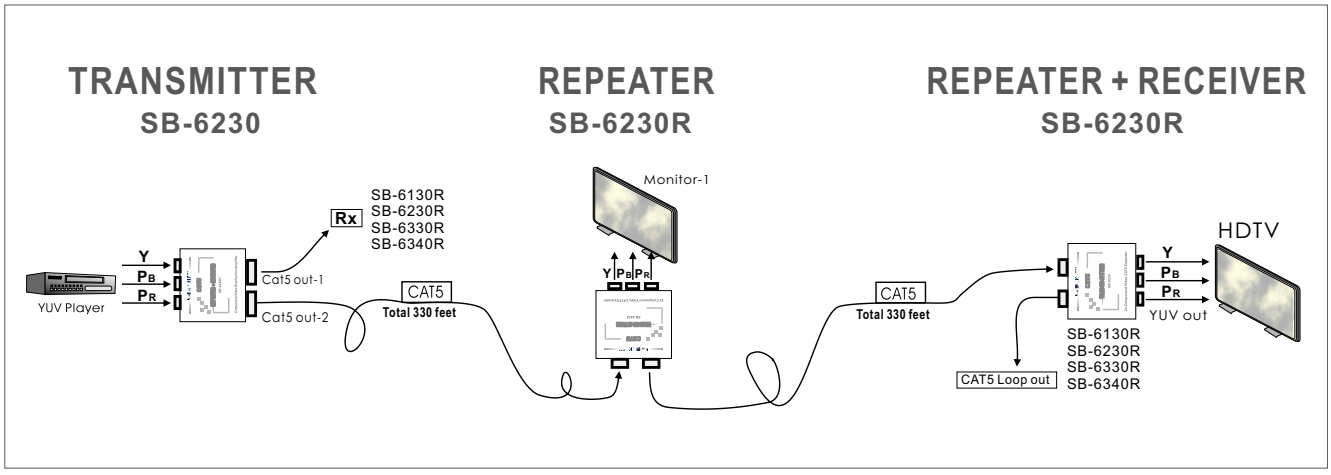

© 2015 Copyrighted All Rights Reserved.

SB-6340/SB-6340R

Component Video Extender

COMPONENT CAT5

SB-6340
4Way Component Video Transmitter

Input : 1x Component Video + 1 Preview port
Output : 4x CAT5

SB-6340R
2Way Component Video Receiver

Input : 1x CAT5 + 1 Loop Output Port
Output : 2x Component Video

FEATURES

01. Support Component Video (YPBPR) CAT5 Transmitter/Receiver/Repeater
02. Provided by the category5 Cable via RJ-45 connector
03. SB-6140 : Input : 1x Component Video + 1 Preview port
    Output : 4x CAT5
04. SB-6140R : Input : 1x CAT5 + 1 Loop Output Port
    Output : 2x Component Video
05. Support Full HD resolutions 480i / 480p / 720p / 1080i and 1080p
06. RGB.TINT and BRIGHTNESS adjustment
07. Extension Distance is up to 100M (330FT)
08. Wall mounted Ear Rack included

SPECIFICATIONS

Type of CAT5	4x WAY CAT5 Transmitter(Tx)/Receiver(Rx)/Repeater
Type of Signals	2x WAY Component Video (YPBPR) Via 3x RCA connectors
CAT5 connection	Provided by the category5 Cable via RJ-45 connectors CAT5 Repeater for Loop output to Another CAT5 Receiver
Video Bandwidth	225MHz(-3dB), 450MHz(-3dB) Large signal bandwidth
Output Balance Error	-60dB @ 50MHz
High isolation between Amplifier	80dB @ 10MHz
Color proofread	TINT and BRIGHTNESS adjustmen
HD resolutions	480i / 480p / 720p / 1080i and 1080p
CAT5 Extend distance	100M (330FT) Maximum
Enclosure	Ear-Wall mounting attached
Safety Approvals	CE, FCC, VCCI
Dimension (WxDxH)	4.49" x 2.87" x 1.14" (113mm x 73mm x 29mm)
Weight	0.2 kg / 0.44 lb
Power Supply	DC12V / 1A Max Use Universal Switch Type 50/60Hz, 100~240VAC

DIAGRAM TYPICAL

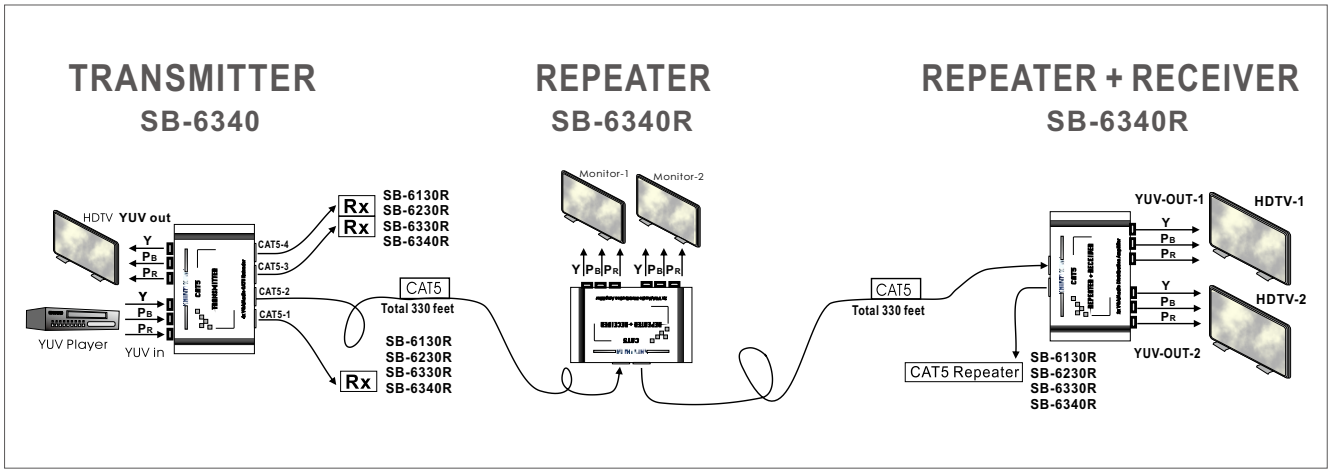

© 2015 Copyrighted All Rights Reserved.

SB-6330/SB-6330R

Component Video · Digital · Audio Extender

COMPONENT | COMPOSITE | VIDEO | DIGITAL | AUDIO | CAT5

SB-6330
4Way Component Video · Digital · Audio Transmitter

Input : 1x Component Video / Digital Audio and Stereo Audio (AR/AL)
Output : 4x CAT5

SB-6330R
2Way Component Video · Digital · Audio Receiver

Input : 1x CAT5 + 1 Loop Output Port
Output : 2x Component Video / Digital Audio and Stereo Audio (AR/AL)

FEATURES

01. Support Component Video (YPBPR) / Digital-Composite Video / Audio Over CAT5
02. Transmitter(Tx)/CAT5 Receiver(Rx)
03. Provided by the Category 5 cable via RJ-45 connector
04. SB-6330 : Input : 1x Component Video / Digital Audio and Stereo Audio
    Output : 4x CAT5
05. SB-6330R : Input : 1x CAT5 + 1 Loop Output Port
    Output : 1x Component Video / Digital Audio and Stereo Audio
06. Support Full HD resolution: 480i / 480p / 720p / 1080i and 1080p
07. RGB, TINT and BRIGHTNESS adjustment
08. Support long distance extension up to 100M (330ft)
09. Wall mounted Ear Rack included

SPECIFICATIONS

Type of CAT5	2x WAY CAT5 Transmitter(Tx)/Receiver(Rx)/ Repeater(Rx)
Type of Signals	Component Video (YPBPR), Composite Video or Digital Audio / Stereo Audio(AR/AL) Via 6x RCA connectors
CAT5 Connection	Provided by the Category 5 cable via RJ-45 connectors CAT5 Repeater(Rxx) for Loop output to another CAT5 receiver
Video Bandwidth	225MHz(-3dB), Large Signal Bandwidth: 450MHz(-3dB)
Output Balance Error	-60dB @ 50MHz
High Isolation Between Amplifier	80dB @ 10MHz
Color Proofread	TINT and BRIGHTNESS adjustment
Audio Impedance	10 Ohms
Audio Frequency Response	20Hz to 20KHz, +/-1dB
HD Resolutions	480i / 480p / 720p / 1080i and 1080p
CAT5 Extend Distance	300M (1000FT) Maximum
Enclosure	ear-wall mounting attached
Safety Approvals	CE, FCC, VCCI
Dimension (WxDxH)	4.49" x 2.87" x 1.14" (113mm x 73mm x 29mm)
Weight	0.2 kg / 0.44 lb
Power Supply	DC12V / 1A Use Universal Switch Type 50/60Hz, 100~240VAC

DIAGRAM TYPICAL

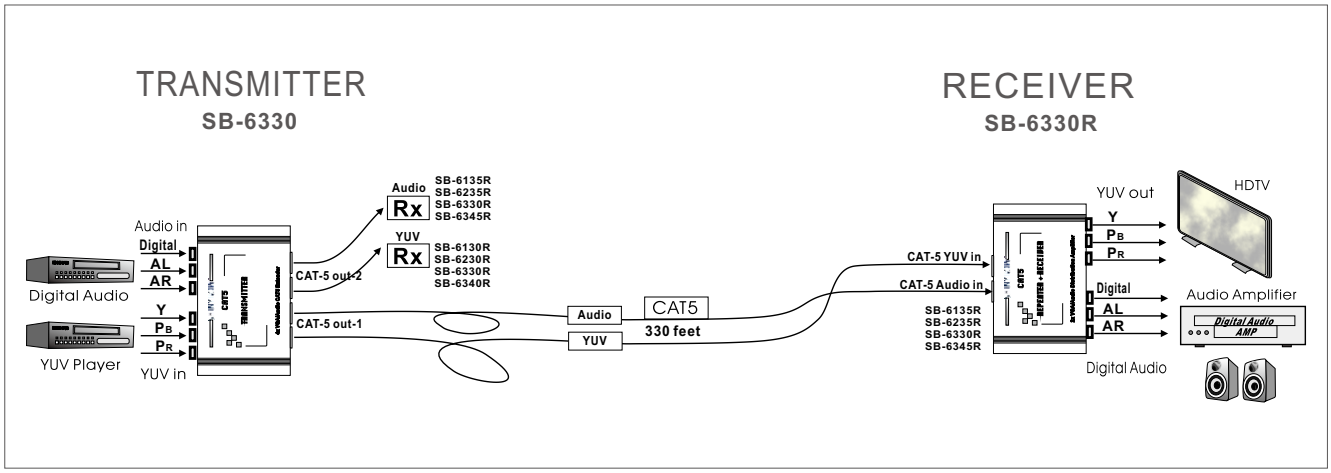

© 2015 Copyrighted All Rights Reserved.